HITACHI

Reliable solutions

Delivery Handbook

Hitachi Construction Machinery Loaders America Inc.

HCMA Wheel Loader Delivery Handbook

Table of Contents

2 Seat Controls

4 Dashboard Controls

9 Side Console – Compacts (ZW30, ZW50, ZW80)

10 Side Console – Single Lever (ZW120-6)

11 Side Console – Single Lever (ZW140-6, ZW150-6, ZW1805B – ZW550-5B, ZW180-6 – ZW370-6)

15 Side Console – Dual Lever (ZW250-5B-ZW550-5B, ZW220-6-ZW310-6)

16 Joystick & E-Stick Steering

18 Monitor Panel/Screen Display

30 Indicators

32 Multi-Function Monitor

33 Automatic Regeneration

34 Manual and Service Regeneration

35 DEF/SCR Information

36 Maintenance

Instructions

Many pages contain links to video tutorials of certain functions and features. To view these videos, either scan the appropriate code with your phone,* or, on the digital copy of the delivery handbook, simply click the code to be sent to the video.

*The codes can be scanned with the ScanLife app, available for free in the iOSApp Store, or with the Barcode Scanner app, available for free in the Android Market/Google PlayStore.

Hitachi Construction Machinery Loaders America Inc. is not responsible for improperly delivered machines, nor the improper use of this handbook. Please refer to the machine operator's manual for full descriptions of machine details.

Adjusting Operator's Seat (Air Suspension Type Seat)

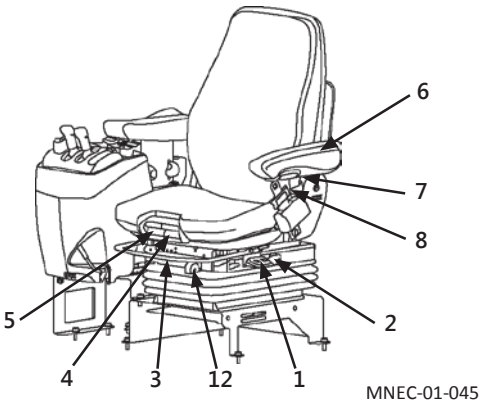

MNEC-01-045

CAUTION: Adjust the seat position so that all the pedals, levers and switches can be easily and correctly operated. Adjust the seat position while the machine is parked.

Components Name

1- Height/Weight Support Adjustment
2- Damper Adjustment
3- Fore-Aft Position Adjustment
4- Inclination Adjustment
5- Seat Depth Adjustment
6- Armrest Adjustment
7- Armrest Angle Adjustment
8- Reclining Angle Adjustment
9- Lumbar Support Adjustment
10- Seat Heater Switch
11 Headrest
12 Indicator

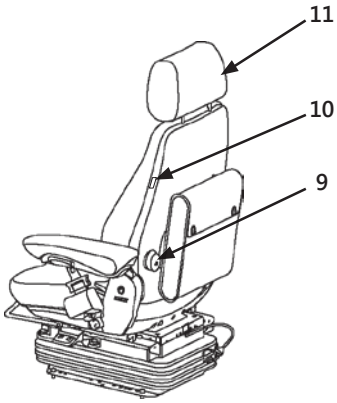

MNEC-01-071

1. Height/Weight Support Adjustment

Pull lever (1) upward to fill air and raise the seat. Push lever (1) downward to release air and lower the seat. When the seat is properly adjusted for your weight, indicator (12) is in the green zone.

IMPORTANT: Do not continuously operate the lever for more than 1 minute. Damage to the air compressor and switch may result.

Watch the instructional video:

#1-12
Seat Controls & Steering Wheel Adjustment

Front Console

1- Steering Wheel
2- Horn Switch
3- Monitor Panel
4- Accelerator Pedal
5- Brake/Inching Pedal (Both right and left sides are interlocked)
6- Forward/Reverse Lever
7- Neutral Lever Lock (Forward/Reverse Lever)
8- Rear Work Light Switch (CAB: Optional)
9- Front Work Light Switch (CAB)
10- Hazard Switch (Optional)
11- Turn Signal Switch
12- Paring Brake Switch
13- Front Window Wiper Switch (CAB)
14- Rear Window Wiper Switch (CAB)
15- Light Switch

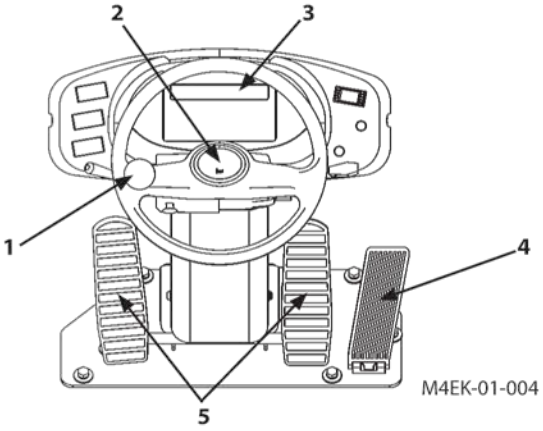

M4EK-01-004

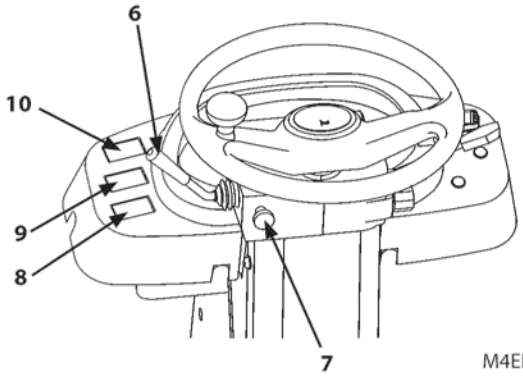

M4EK-01-005

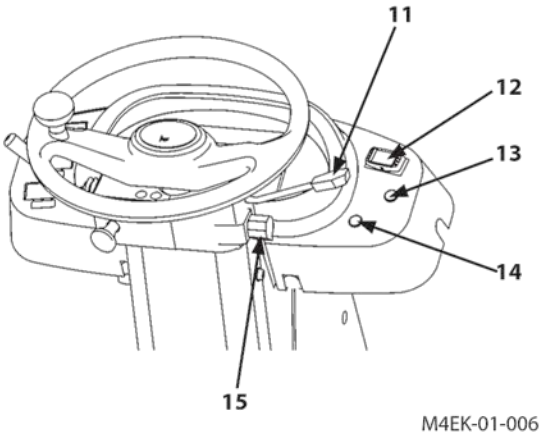

M4EK-01-006

Front Console

1 Steering Wheel
2 Horn switch
3 Monitor Panel
4 Accelerator Pedal
5 Brake/Inching Pedal
(Both right and left sides are interlocked.)
6 Brake/Inching Pedal
(Both right and left sides are interlocked.)
7 Neutral Lever Lock (F-N-R Lever)
8 F-N-R Lever
9 Hi-Lo Selector Switch
10 Front and Rear Work Light Switch (Cab Vehicle)
11 Hazard Switch
12 Turn Signal Lever
13 Parking Brake Switch
14 Front Window Wiper Switch (Cab Vehicle)
15 Rear Window Wiper Switch (Cab Vehicle)
16 Light Switch

NOTE: Cab vehicle is an optional.

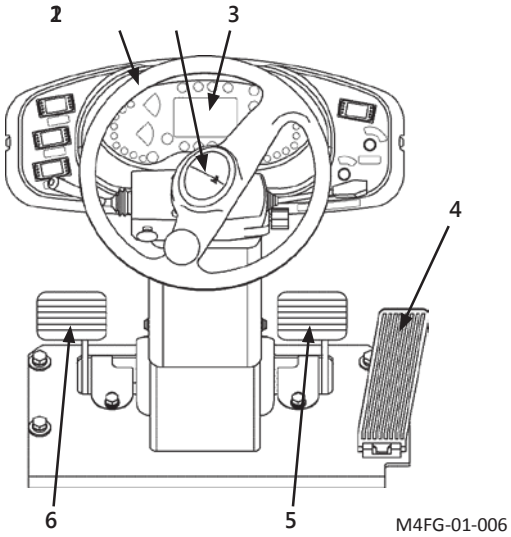

M4FG-01-006

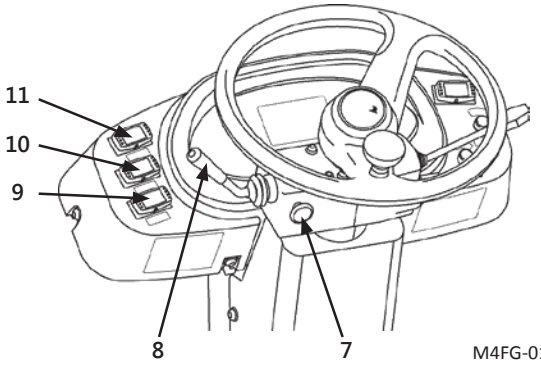

M4FG-01-007

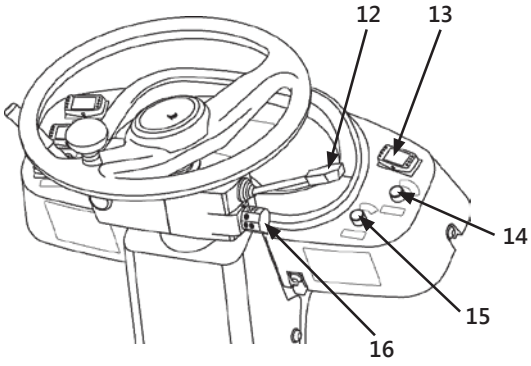

M4FG-01-008

Front Console

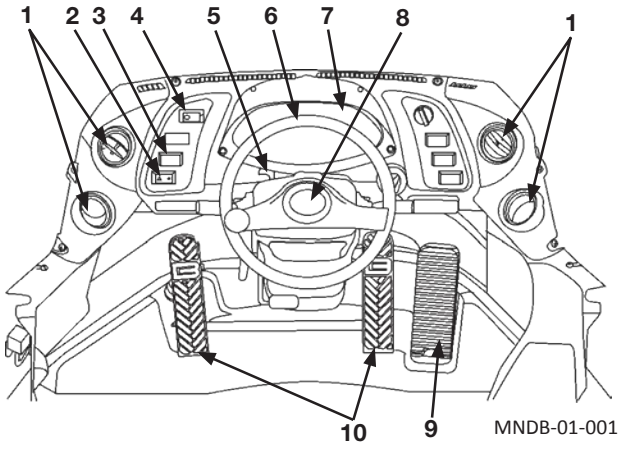

MNDB-01-001

1 Air Conditioner Front Vent
2 Hazard Switch
3 Work Light Switch
4 Parking Brake Switch
5 Neutral Lever Lock (Forward/Reverse Lever)
6 Steering Wheel
7 Monitor Panel
8 Horn Switch
9 Accelerator Pedal
10 Brake/Inching Pedal (Both right and left sides are interlocked.)
11 Front/Rear Wiper Switch
12 Forward/Reverse Lever/Shift Switch
13 Steering Column Tilt Pedal
14 Tilt, Telescopic Lever
15 Turn Signal Lever/Light Switch/High-Low Beam Switch
16 Key Switch
17 1st Speed Selector Switch (ZW140-5B/ZW150-5B)
Slow Speed (L) Select Switch (ZW120-6)
18 Auto Idling Stop Switch
19 Auxiliary
20 Auxiliary
21 Ash Tray
22 Cigar Lighter

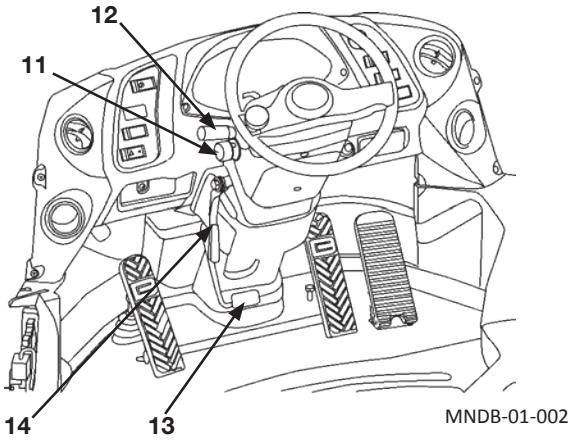

MNDB-01-002

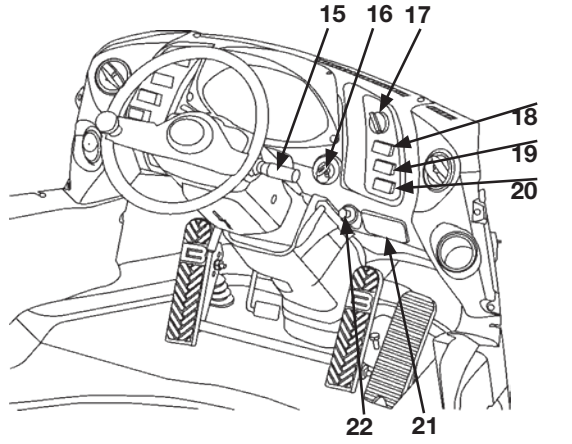

MNDB-01-003

#26
Creeper Mode SW Operation, MTS

#29
Inching Pedal For HST, MTS

1st Speed Select Switch

Maximum speed can be selected from 7 km/h to 13 km/h (4.3 to 8.1 mph) range by operating 1st speed select switch (2) while shift switch (1) is in the 1st speed position.

NOTE: Maximum speed can be selected from 0 km/h to 7 km/h (0 to 4.3 mph) range when creep mode switch (3) is in the ON position.

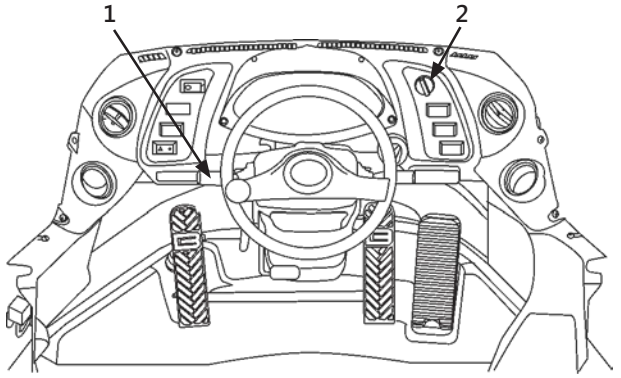

MNDB-01-001

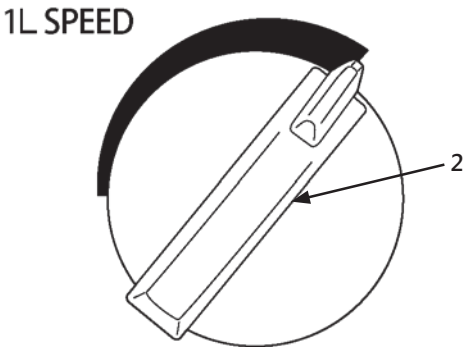

MNDF-01-019

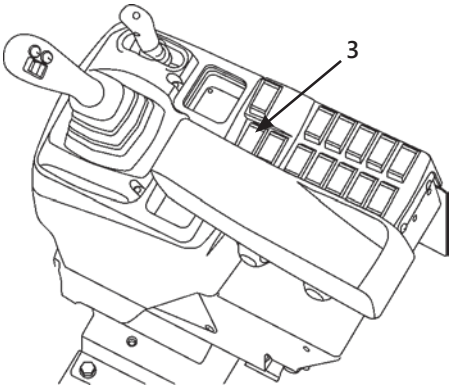

MNDB-01-005

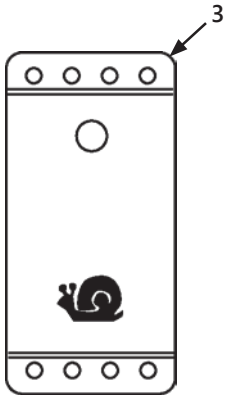

MNDF-01-020

Front Console

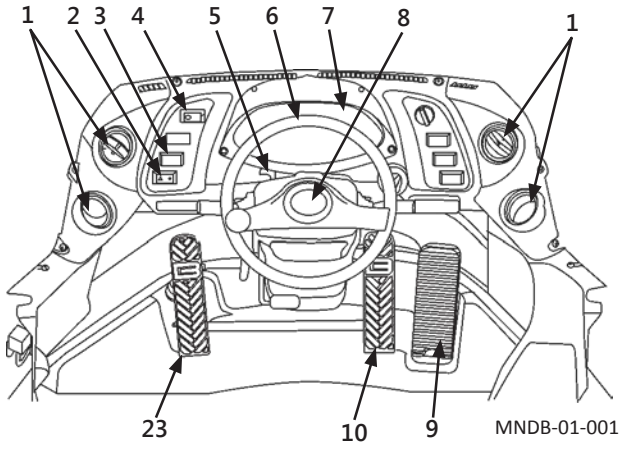

MNDB-01-001

1. Air Conditioner Front Vent
2. Hazard Switch
3. Work Light Switch
4. Parking Brake Switch
5. Neutral Lever Lock (Forward/Reverse Lever)
6. Steering Wheel
7. Monitor Panel
8. Horn Switch
9. Accelerator Pedal
10. Brake Pedal
11. Front/Rear Window Wiper Switch
12. Forward/Reverse Lever/ Shift Switch
13. Steering Column Tilt Pedal
14. Tilt, Telescopic Lever
15. Turn Signal Lever/ Light Switch/ High-Low Beam Switch
16. Key Switch
17. Travel Mode Selector
18. Auto Idling Stop Switch
19. Declutch Position Switch
20. Shift Change Delay Mode Switch
21. Ash Tray
22. Cigar Lighter
23. Brake/Declutch Pedal

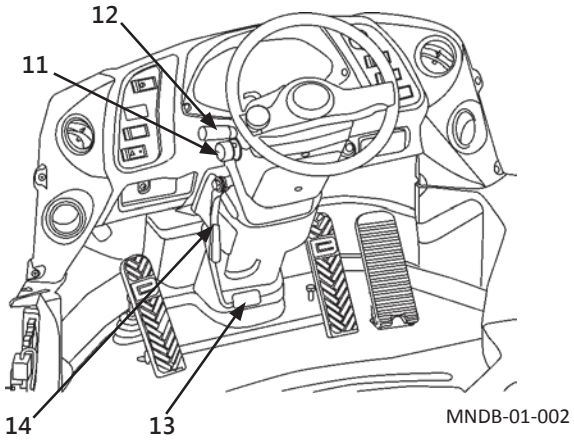

MNDB-01-002

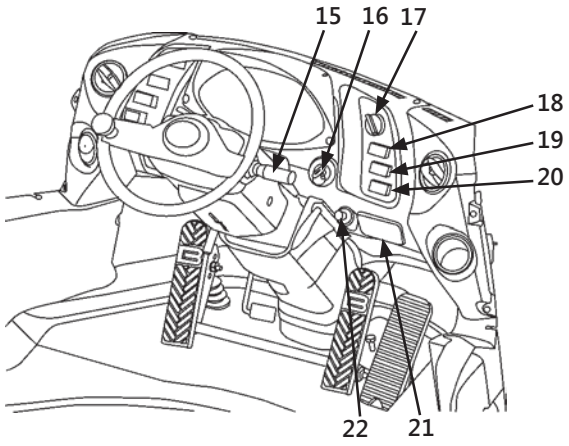

MNDB-01-003

#17 Right Side Dash Switches

#18-20 Transmission Selections: Manual, Auto 1 or Auto 2

Front Console

1. Air Conditioner Front Vent
2. Hazard Switch
3. Work Light Switch
4. Parking Brake Switch
5. Neutral Lever Lock (Forward/Reverse Lever)
6. Steering Wheel
7. Monitor Panel
8. Horn Switch
9. Accelerator Pedal
10. Brake Pedal
11. Front/Rear Window Wiper Switch
12. Forward/Reverse Lever/ Shift Switch
13. Steering Column Tilt Pedal
14. Tilt, Telescopic Lever
15. Turn Signal Lever/ Light Switch/ High-Low Beam Switch
16. Key Switch
17. Multi Function Monitor/Air Conditioner Switch Panel
18. Ash Tray
19. Cigar Lighter
20. Brake/Declutch Pedal

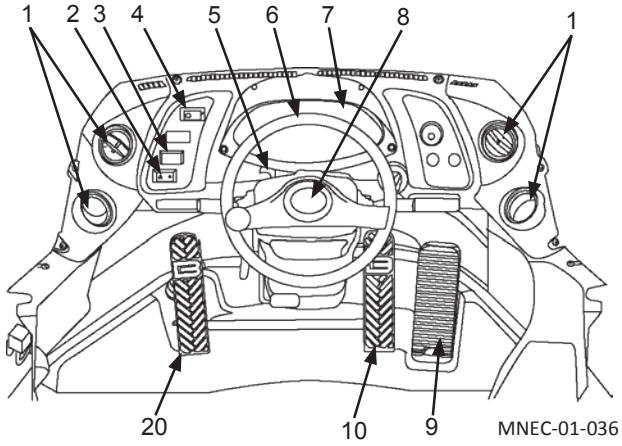

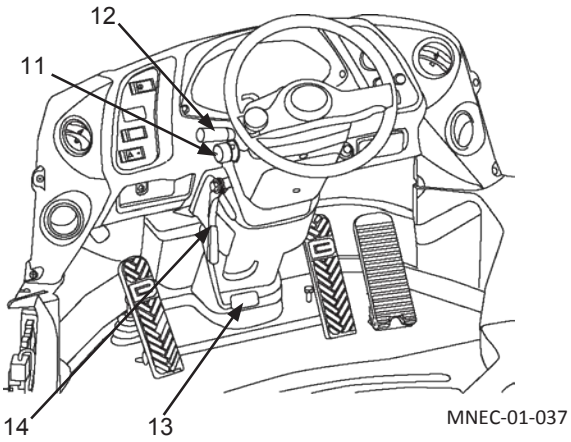

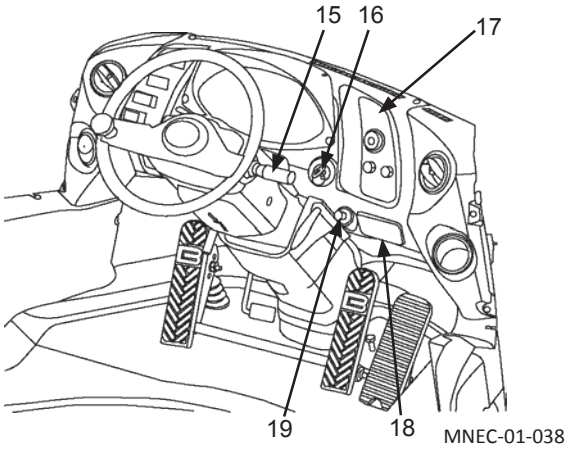

Watch the instructional videos:

#16
ZW250-6 SW & Lamp on LH

#5, 12
Neutral Lever Lock, Forward/Reverse Lever/ Shift Switch

#17
ZW250-6 AC & Monitor

SIDE CONSOLE ZW30/ ZW50/ ZW80

RIGHT CONSOLE

1. Loader Control Lever
2. Loader Control Lever Lock
3. Auxiliary
4. Driving Mode Switch (optional)
5. Heater Switch
6. Key Switch

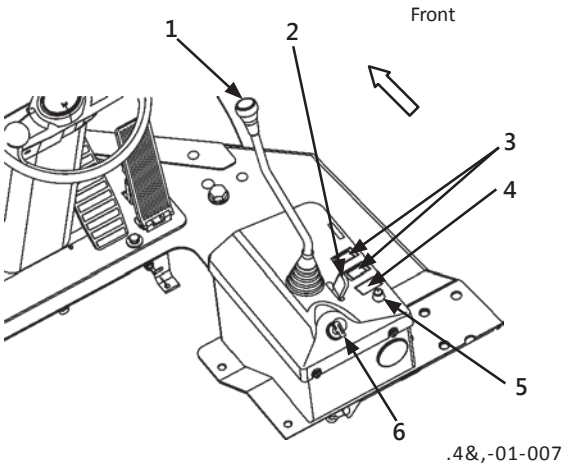

.4&,-01-007

SIDE CONSOLE ZW80

Right Console

Mono-Lever Type

1. Loader Control Lever
2. Auxiliary Control Lever (Optional)
3. Auxiliary Control Lever Lock
4. Auxiliary (Optional)
5. Ride Control Switch (Optional)
6. eco Mode Switch
7. Heater Switch (Optional for Cab Vehicle)
8. Key Switch
9. Loader Control Lever Lock

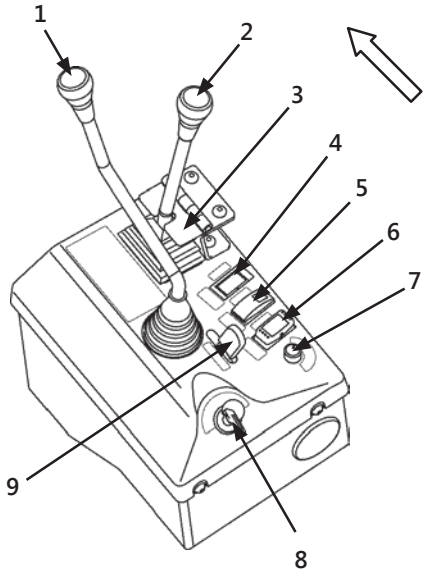

M4FG-01-009

Differential Lock Option (only available ZW80)

IMPORTANT: Use the differential lock momentarily only when added traction is required, such as driving on slippery, soft, muddy, or uneven surfaces.

⚠ CAUTION: Avoid using differential lock while steering.

When using differential lock button (10), be sure to place lever lock (9) in the LOCK position.

Press differential lock button (10) to engage the wet clutch to lock up the front differential.
The differential lock instantly works and keeps engaging while depressing the lock button (10) to maintain traction.

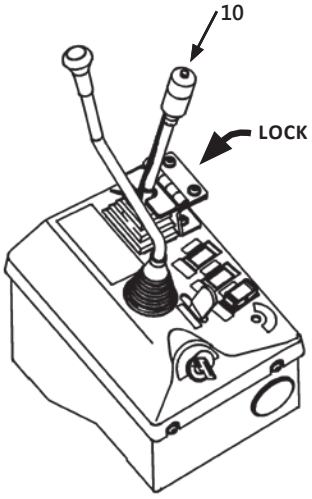

Right Console

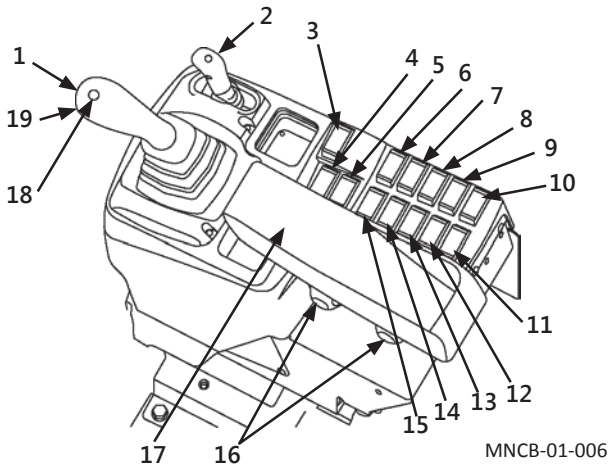

1. Control Lever
2. Auxiliary Control Lever (Option)
3. Control Lever Lock Switch
4. Auxiliary
5. Traction Control Switch
6. Power Mode Switch
7. Auxiliary
8. Auxiliary
9. Reverse Buzzer Switch (Option)
10. Auxiliary
11. Secondary Steering Operation Check Switch (Option)
12. Auxiliary
13. Auxiliary
14. Auxiliary
15. Ride Control Switch (Option)
16. Armrest Adjust Handle
17. Armrest
18. Quick Shift Switch (QSS)
19. Horn Switch (Under the Lever)

Right Console

Multi-Function Joystick Type

1. Forward/Reverse Switch
2. Multi-Function Joystick Lever
3. Auxiliary
4. Auxiliary
5. Auxiliary Control Lever (Option)
6. Control Lever Lock Switch
7. Creep Switch
8. Traction Control Switch
9. Power Mode Switch
10. Forward/Reverse Selector Switch
11. Fan Reverse Rotation Switch
12. Auxiliary
13. Locking for cuppler
14. Secondary Steering Operation Check Switch (Option)
15. Exhaust Filter Regeneration Switch
16. Lift Arm Auto Leveler Switch (Height Kick out)
17. Lift Arm Auto Leveler Switch (Lower Kick out)
18. Ride Control Switch (Option)
19. Armrest Adjust Handle
20. Armrest
21. Auxiliary
22. Horn Switch (Under the Lever)

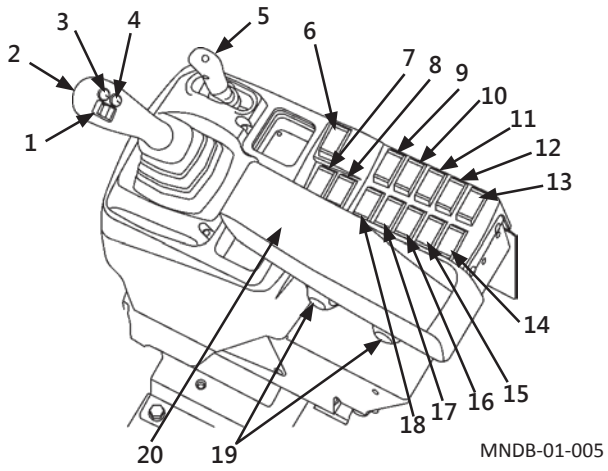

MNDB-01-005

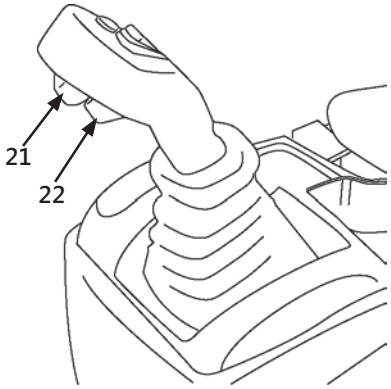

MNEC-01-044

#8 Traction control switch

Right Console

Multi-Function Joystick Type

1. Forward/Reverse Switch
2. Multi-Function Joystick Lever
3. Auxiliary
4. Auxiliary
5. Auxiliary Control Lever (Optional)
6. Control Lever Lock Switch
7. Creep Mode Switch
8. Traction Control Switch
9. Power Mode Switch
10. Forward/Reverse Selector Switch
11. Fan Reverse Rotation Switch
12. Reverse Buzzer Switch
13. Auxiliary
14. Secondary Steering Operation Check Switch (Optional)
15. After treatment Device Regeneration Switch
16. Lift Arm Auto Leveler Switch (Height Kick-out)
17. Lift Arm Auto Leveler Switch (Lower Kick-out)
18. Ride Control Switch (Optional)
19. Armrest Adjust Handle
20. Armrest
21. Auxiliary
22. Horn Switch (Under the Lever)

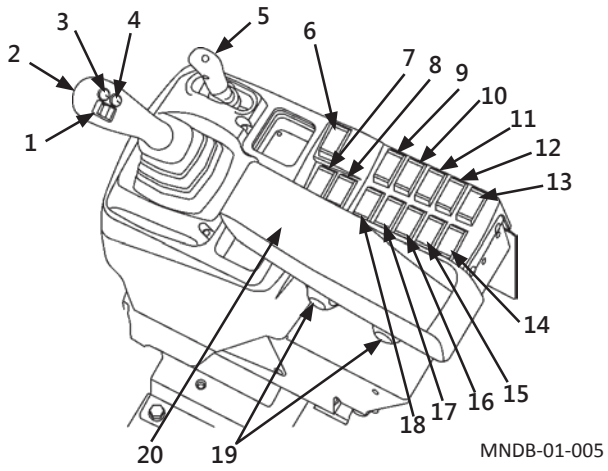

MNDB-01-005

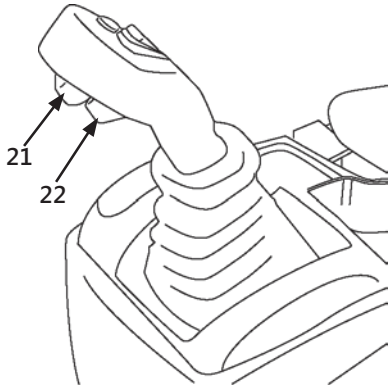

MNEC-01-044

Right Console

Multi-Function Joystick Type

1. Forward/Reverse Switch
2. Multi-Function Joystick Lever
3. Quick power switch
4. DSS (Down Shift Switch)
5. Auxiliary Control Lever (Optional)
6. Control Lever Lock Switch
7. Auxiliary
8. Auxiliary
9. Power Mode Switch
10. Forward/Reverse Selector Switch
11. Fan Reverse Rotation Switch
12. Auxiliary
13. Auxiliary
14. Secondary Steering Operation Check Switch (Optional)
15. Lift Arm Auto Leveler Switch (Upward Set)
16. Lift Arm Auto Leveler Switch (Downward Set)
17. 1st Speed Fixed Switch
18. Ride Control Switch (Optional)
19. Armrest Adjust Handle
20. Armrest
21. Hold Switch (under the Lever)
22. Horn Switch (Under the Lever)

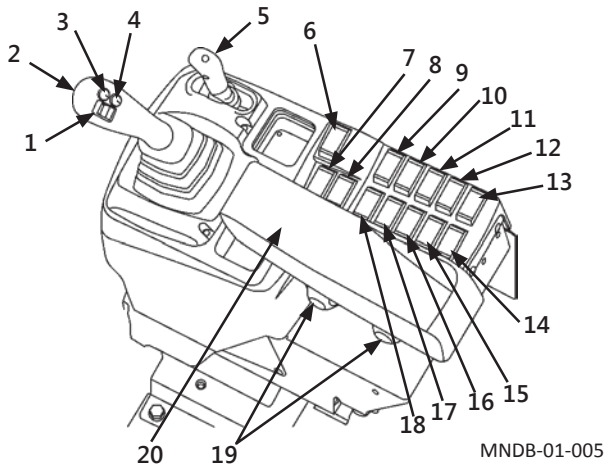

MNDB-01-005

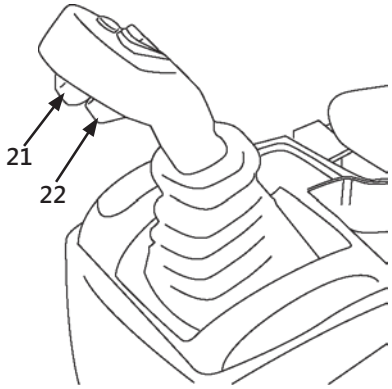

MNEC-01-044

#15-16 Lift Arm Auto Lever Switch (Dual Boom Kick outs)

Right Console

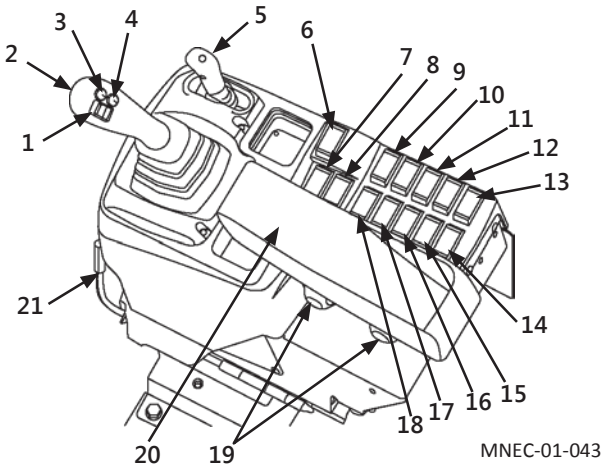

MNEC-01-043

Multi-Function Joystick Type

1. Forward/Reverse Switch
2. Multi-Function Joystick Lever
3. Quick Power Switch
4. DSS (Down Shift Switch)
5. Auxiliary Control Lever (Optional)
6. Control Lever Lock Switch
7. De-clutch Position Switch
8. Travel Mode Selector
9. Work Mode Selector
10. Forward/Reverse Selector Switch
11. Fan Reverse Rotation Switch
12. Hydraulic Coupler Switch (Optional)
13. Auxiliary
14. Secondary Steering Operation Check Switch (Optional)
15. Exhaust Filter Regeneration Switch
16. Auxiliary
17. 1st Gear Hold Switch
18. Ride Control Switch (Optional)
19. Armrest Adjust Handle
20. Armrest Adjustment
21. Right Console Slide Lever
22. Hold Switch (Under the Lever)
23. Horn Button (Under the Lever)

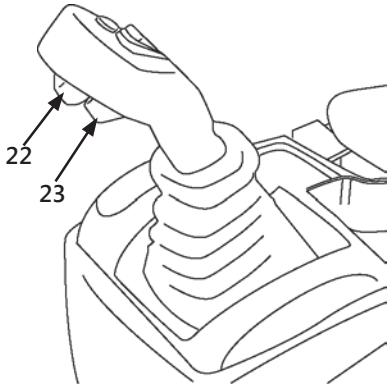

MNEC-01-044

Watch the instructional videos:

#1-4
Forward/Reverse Switch, Joystick Lever, Quick Power Switch, Down Shift Switch

#7, 8
Declutch Position Switch Travel Mode Selector

#9, 11
Power Mode Selector, Reversible Fan Switch

#14, 18
Secondary Steering Option Check Switch, Ride Control Switch

#15-16 Lift Arm Auto Lever Switch (Dual Boom Kickouts)

#17
1st Gear Hold Switch

#21, 23
Horn, Console Slide Lever, Arm Rest Adjustment

SIDE CONSOLE – DUAL LEVER ZW250-5B – ZW550-5B, ZW220-6 – ZW310-6

Right Console

Fingertip Control Type

1. Auxiliary Control Lever (Optional)
2. Bucket Control Lever
3. Lift Arm Control Lever
4. Forward/Reverse Switch
5. Control Lever Lock Switch
6. Declutch Position Switch
7. Travel Mode Selector
8. Power Mode Selector
9. Forward/Reverse Selector Switch
10. Fan Reverse Rotation Switch
11. Hydraulic Coupler Switch (Optional)
12. Auxiliary
13. Secondary Steering Operation Check Switch (Optional)
14. Exhaust Filter Regeneration Switch
15. Auxiliary
16. Auxiliary
17. Ride Control Switch (Optional)
18. Armrest Adjust Handle
19. Armrest
20. Hold Switch
21. Right Console Slide Lever
22. DSS (Down Shift Switch)
23. Horn Switch
24. Quick Power Switch

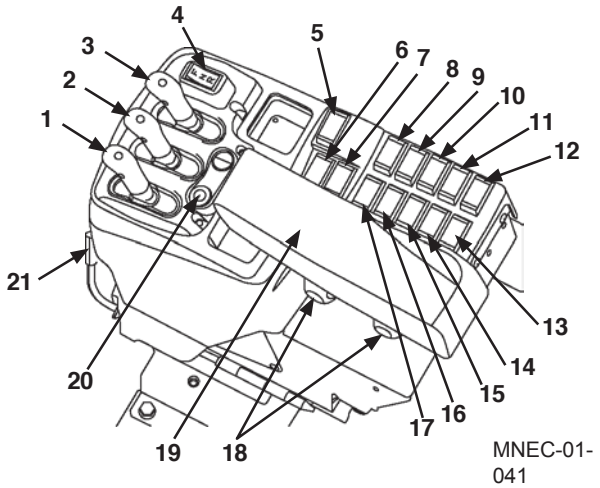

MNEC-01-041

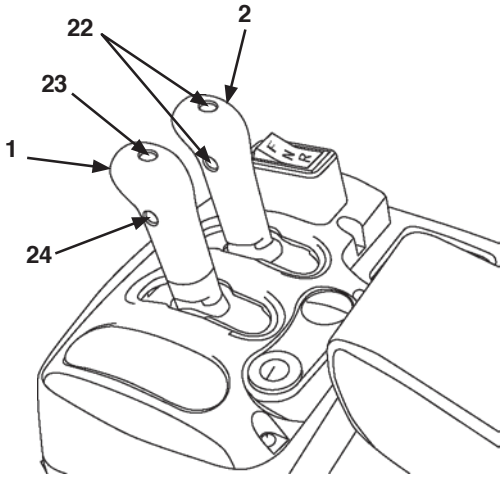

MNEC-01-042

Watch the instructional videos:

#4, 9
Forward/Reverse Switch & Selector Switch

#6, 7
Declutch Position Switch, Travel Mode Selector

#8, 10
Power Mode Selector, Reversible Fan Switch

#13, 17
Secondary Steering Operation Check Switch, Ride Control Switch

#20-24
Hold, Down Shift, Horn, & Quick Power Switches; Console Slide Lever

Multi-Function Monitor/Air Conditioner Switch Panel

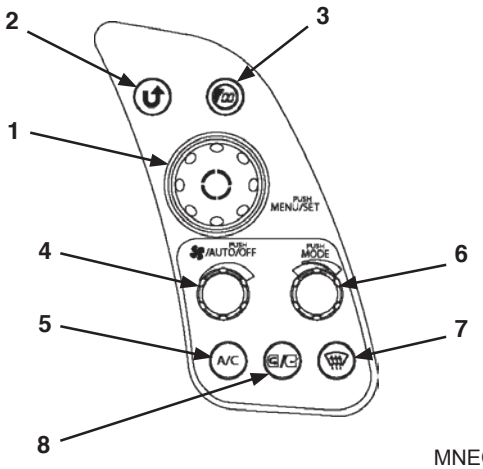

MNEC-01-006

1. Select Confirm Knob
2. Return to Previous Screen
3. Return to Basic Screen
4. Blower / Air Conditioner AUTO Switch
5. Air Conditioner ON / OFF Switch
6. Temperature / Mode Switch
7. Defroster Switch
8. Circulation / Fresh Air Switch

Joystick Steering Controls

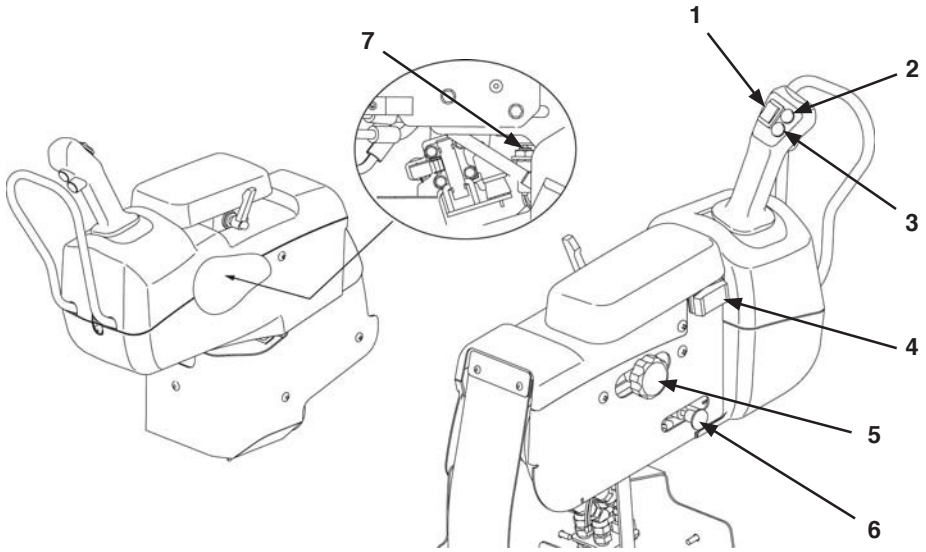

115Z7-01-02-06

1. Forward / Reverse Switch
2. Shift Up Switch
3. Shift Down Switch
4. Joystick Steering System Switch
5. Armrest Adjust Handle
6. Armrest Lock Release Button
7. Armrest Switch (Micro Switch)

Joystick Steering (Optional)

Layout

1. Switch Box
2. Left Console Pipe
3. Left Armrest
4. DSS (Down Shift Switch)
5. Forward/Reverse Switch (Left)
6. Wiper Switch
7. Joystick Steering Selector Switch
8. Joystick Steering Lever
9. Left Console Lock Release Lever
10. Switch Box Fore/Aft Adjustment Bolt
11. Left Console Height Adjustment Bolt
12. Left Armrest Angle Adjustment Dial
13. Switch Box Angle Adjustment Bolt
14. Joystick Steering Indicator
15. Forward/Reverse Selector Switch Indicator

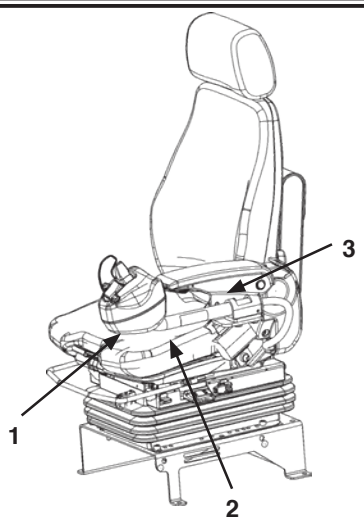

MNEK-13-001

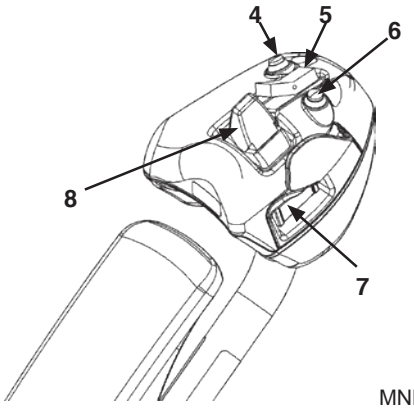

MNEK-13-002

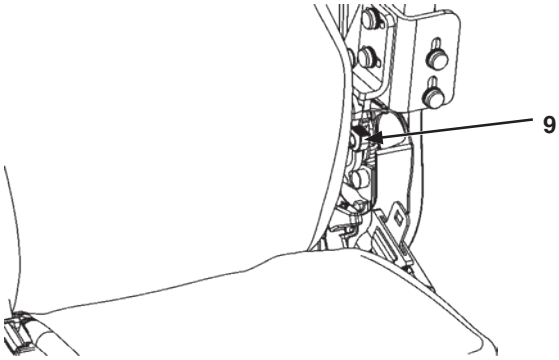

MNEK-13-003

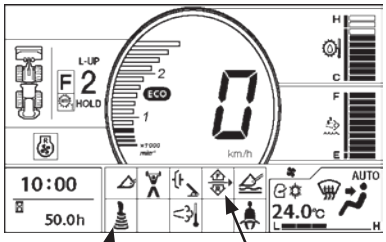

Multi-Function Monitor

MNEK-01-100

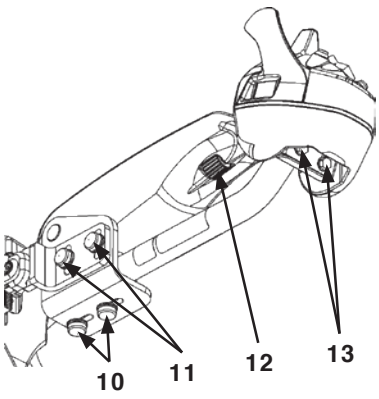

MNEK-13-004

MONITOR PANEL

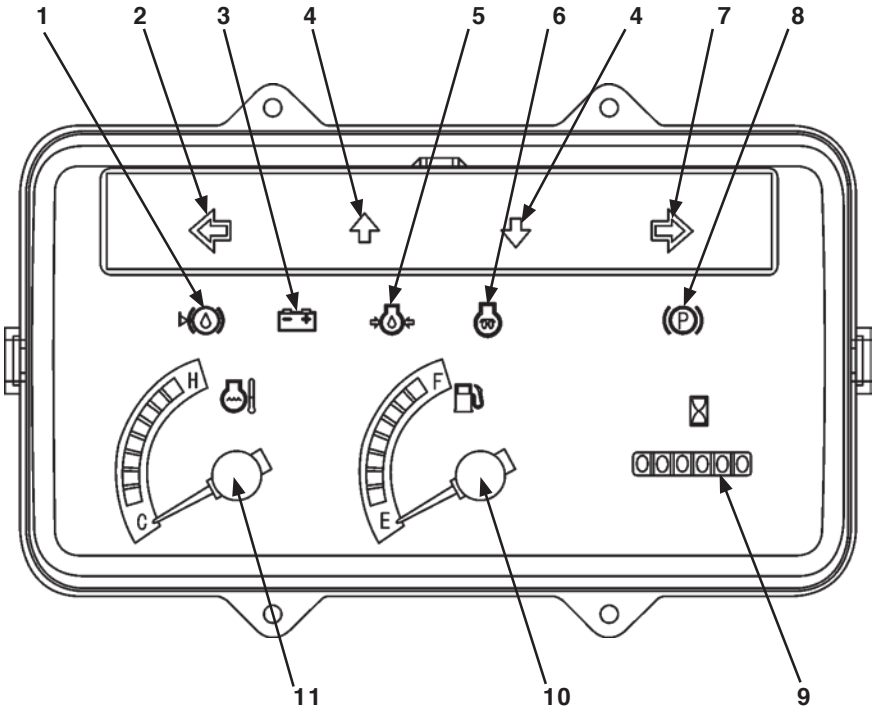

.4& +-01-008

1. Brake Oil Low Level Indicator
2. Left Turn Signal Indicator
3. Discharge Warning Indicator
4. Forward/ Reverse Indicator
5. Engine Oil Low Pressure Indicator
6. Preheat Indicator
7. Right Turn Signal Indicator
8. Parking Brake Indicator
9. Hour meter
10. Fuel Gauge

Monitor Panel

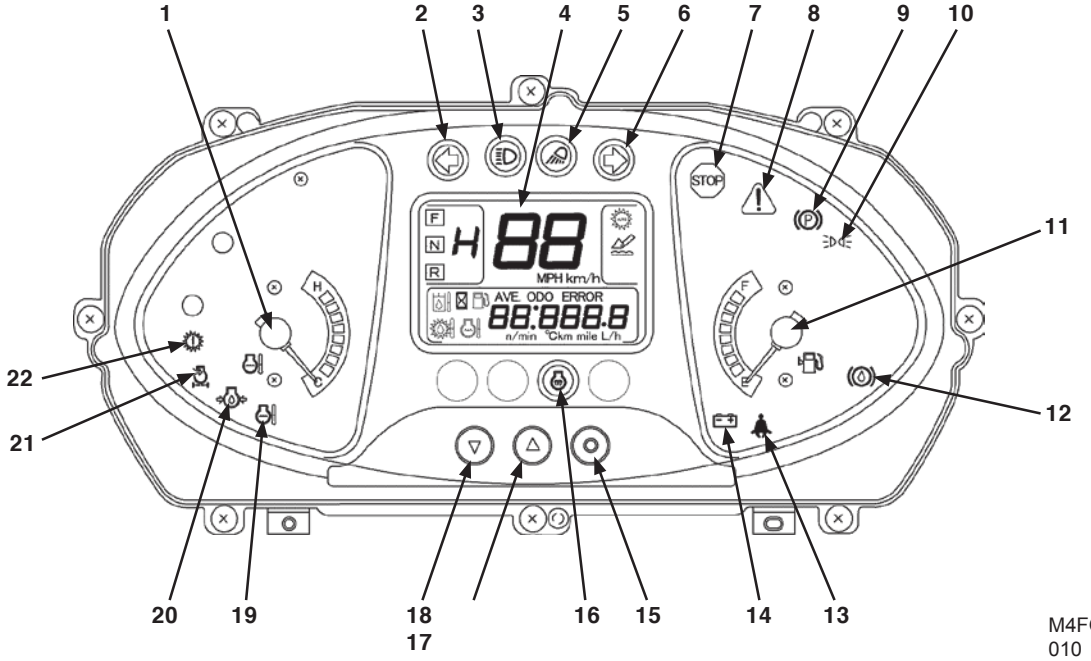

M4FG-01-010

1. Engine Coolant Temperature Gauge
2. Left Turn Signal Indicator
3. High Beam Indicator
4. Monitor Display
5. Work Light Indicator (Optional)
6. Right Turn Signal Indicator
7. Stop Indicator
8. Service Indicator
9. Parking Brake Indicator
10. Clearance Light Indicator
11. Fuel Gauge
12. Brake Oil Low Level Indicator
13. Not Used
14. Discharge Warning Indicator
15. HST Error Code Readout Switch
16. Preheat Indicator
17. Monitor Display Selector
18. Not Used
19. Overheat Indicator
20. Engine Oil Low Pressure Indicator
21. Air Filter Restriction Indicator
22. HST Warning Indicator

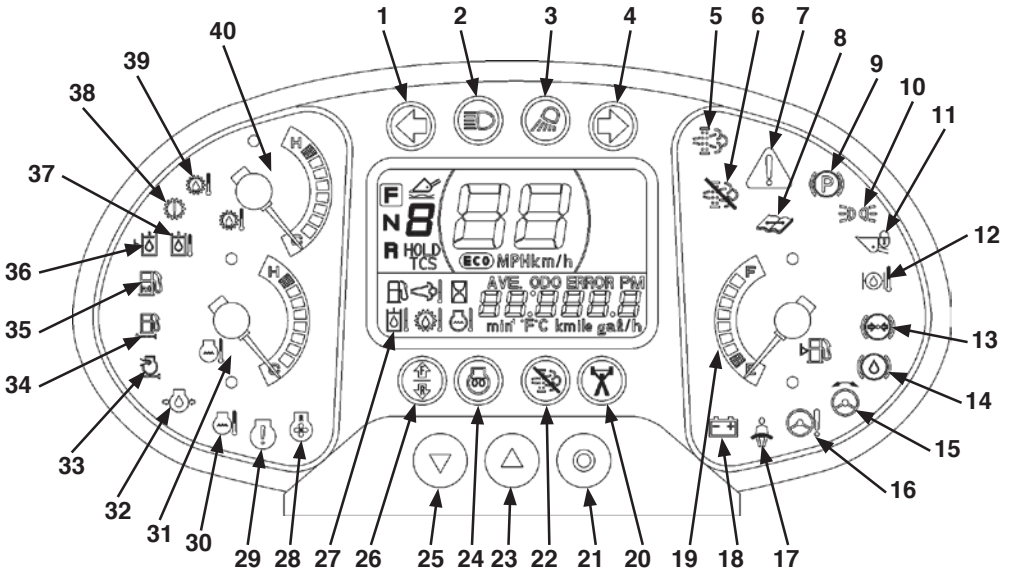

MNDB-01-034

1. Left Turn Signal Indicator
2. High Beam Indicator
3. Work Light Indicator
4. Right Turn Signal Indicator
5. Not Used
6. Not Used
7. Service Indicator
8. Maintenance Indicator
9. Parking Brake Indicator
10. Clearance Light Indicator
11. Control Lever Lock Indicator (Option)
12. Not Used
13. Not Used
14. Brake Oil Level Indicator
15. Secondary Steering Indicator (option)
16. Low Steering Oil Pressure Indicator (Option)
17. Seat Belt Indicator
18. Discharge Warning Indicator
19. Fuel Gauge
20. Power Mode Indicator
21. Monitor Display Mode Selector
22. Not Used
23. Monitor Display Selector (Up)
24. Preheat Indicator
25. Monitor Display Selector (Down)
26. Not Used
27. Monitor Display
28. Not Used
29. Engine Trouble Indicator
30. Overheat Indicator
31. Coolant Temperature Gauge
32. Engine Oil Low Pressure Indicator
33. Not Used
34. Not Used
35. Not Used
36. Not Used
37. Not Used
38. HST Warning Indicator
39. HST Oil Temperature Indicator
40. HST Oil Temperature Gauge

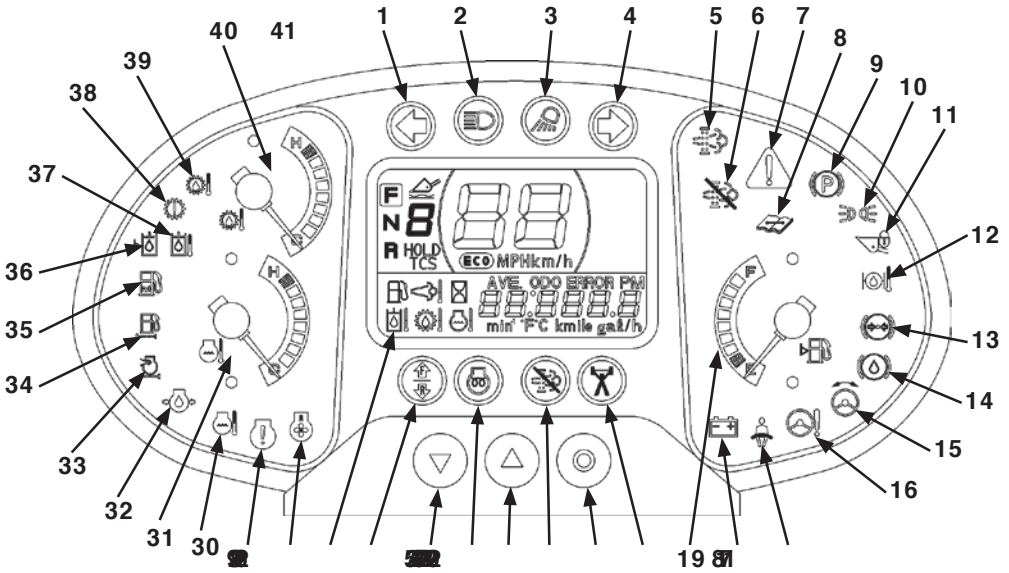

MNDB-01-034

1. Left Turn Signal Indicator
2. High Beam Indicator
3. Work Light Indicator
4. Right Turn Signal Indicator
5. Exhaust Filter Warning Indicator
6. Exhaust Filter Regeneration inhibited Warning Indicator
7. Service Indicator
8. Maintenance Indicator
9. Parking Brake Indicator
10. Clearance Light Indicator
11. Control Lever Lock Indicator
12. Not Used
13. Brake Oil Low Pressure Indicator
14. Not Used
15. Secondary Steering Indicator (Option)
16. Low Steering Oil Pressure Indicator (Option)
17. Seat Belt Indicator
18. Discharge Warning Indicator
19. Fuel Gauge
20. Power Mode Indicator
21. Monitor Display Mode Selector
22. Exhaust Filter Regeneration inhibited Indicator
23. Monitor Display Selector (Up)
24. Preheat Indicator
25. Monitor Display Selector (Down)
26. Forward/Reverse Selector Switch Indicator
27. Monitor Display
28. Fan Reverse Rotation Indicator
29. Engine Trouble Indicator
30. Overheat Indicator
31. Coolant Temperature Gauge
32. Engine Oil Low Pressure Indicator
33. Air Filter Restriction Indicator
34. Fuel Filter Restriction Indicator
35. Water Separator Indicator (Option)
36. Hydraulic Oil Level Indicator
37. Not Used
38. HST Warning Indicator
39. HST Oil Temperature Indicator
40. HST Oil Temperature Gauge

Monitor Panel

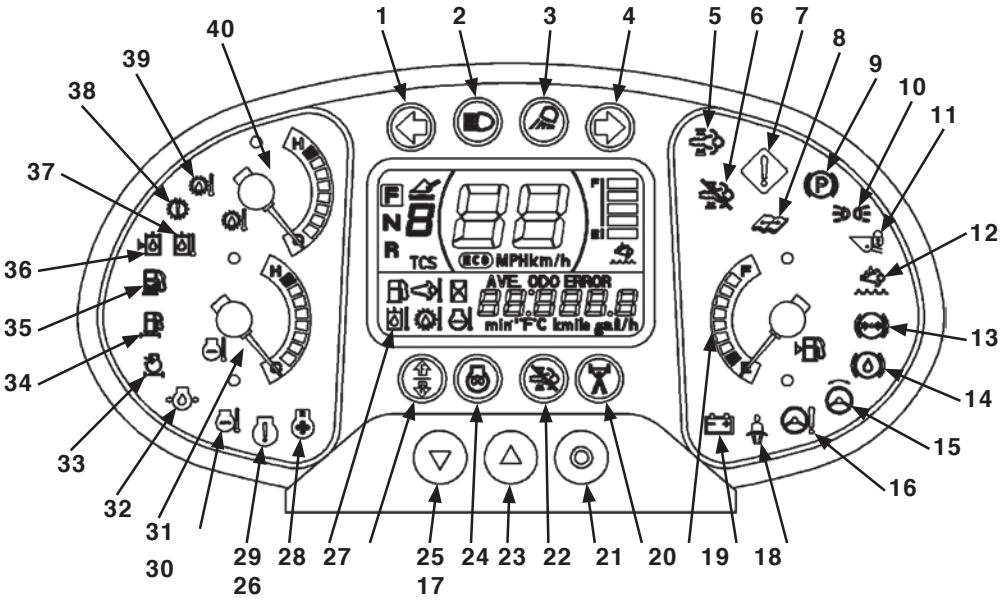

MPTC-01-019

1. Left Turn Signal Indicator
2. High Beam Indicator
3. Work Light Indicator
4. Right Turn Signal Indicator
5. After treatment Device Warning Indicator
6. After treatment Device Regeneration inhibited Warning Indicator
7. Service Indicator
8. Maintenance Indicator
9. Parking Brake Indicator
10. Clearance Light Indicator
11. Control Lever Lock Indicator
12. Urea Warning Indicator
13. Brake Oil Low Pressure Indicator
14. Not Used
15. Secondary Steering Indicator (Optional)
16. Low Steering Oil Pressure Indicator (Optional)
17. Seat Belt Indicator
18. Discharge Warning Indicator
19. Fuel Gauge
20. Power Mode Indicator
21. Monitor Display Mode Selector
22. After treatment Device Regeneration inhibited Indicator
23. Monitor Display Selector (Up)
24. Preheat Indicator
25. Monitor Display Selector (Down)
26. Forward/Reverse Selector Switch Indicator
27. Monitor Display
28. Fan Reverse Rotation Indicator
29. Engine Trouble Indicator
30. Overheat Indicator
31. Coolant Temperature Gauge
32. Engine Oil Low Pressure Indicator
33. Air Filter Restriction Indicator
34. Fuel Filter Restriction Indicator
35. Water Separator Indicator
36. Hydraulic Oil Level Indicator
37. Not Used
38. HST Warning Indicator
39. HST Oil Temperature Indicator
40. HST Oil Temperature Gauge

Monitor Panel

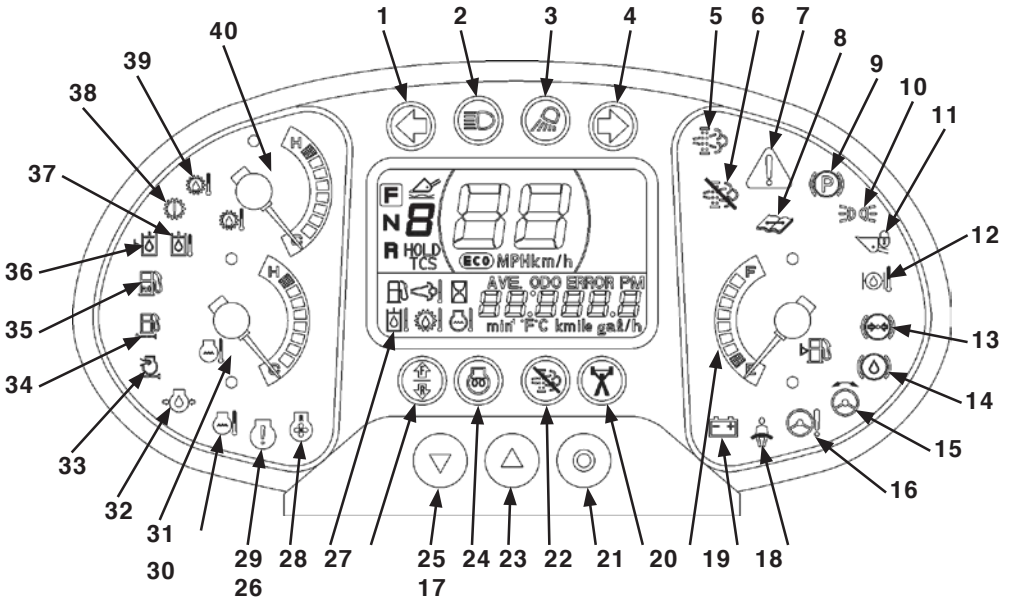

1. Left Turn Signal Indicator
2. High Beam Indicator
3. Work Light Indicator
4. Right Turn Signal Indicator
5. Not Used
6. Not Used
7. Service Indicator
8. Maintenance Indicator
9. Parking Brake Indicator
10. Clearance Light Indicator
11. Control Lever Lock Indicator
12. Axle Oil Temperature Indicator
13. Brake Oil Low Pressure Indicator
14. Not Used
15. Secondary Steering Indicator (Optional)
16. Low Steering Oil Pressure Indicator (Optional)
17. Seat Belt Indicator
18. Discharge Warning Indicator
19. Fuel Gauge
20. Power Mode Indicator
21. Monitor Mode Selector
22. Not Used
23. Monitor Display Selector (Up)
24. Preheat Indicator
25. Monitor Display Selector (Down)
26. Forward/Reverse Selector Switch Indicator
27. Monitor Display
28. Fan Reverse Rotation Indicator
29. Engine Warning Indicator
30. Overheat Indicator
31. Coolant Temperature Gauge
32. Engine Oil Low Pressure Indicator
33. Air Filter Restriction Indicator
34. Not Used
35. Water Separator Indicator
36. Hydraulic Oil Level Indicator
37. Hydraulic Oil Temperature Indicator
38. Transmission Warning Indicator
39. Transmission Oil Temperature Indicator
40. Transmission Oil Temperature Gauge

Monitor Panel

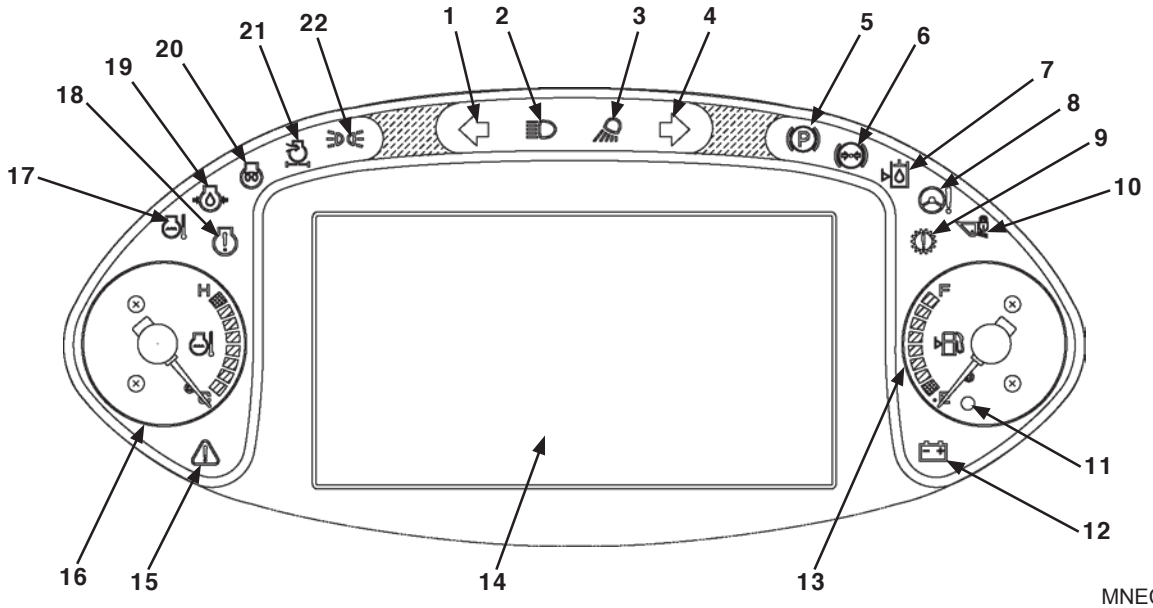

MNEC-01-001

1. Left Turn Signal Indicator
2. High Beam Indicator
3. Work Light Indicator
4. Right Turn Signal Indicator
5. Parking Brake Indicator
6. Brake Oil Low Pressure Indicator
7. Hydraulic Oil Level Indicator
8. Low Steering Oil Pressure Indicator
9. Transmission Warning Indicator
10. Control Lever Lock Indicator
11. Fuel Level Indicator
12. Discharge Warning Indicator
13. Fuel Gauge
14. Multi Function Monitor
15. Communication System Error Indicator
16. Coolant Temperature Gauge
17. Overheat Indicator
18. Engine Warning Indicator
19. Engine Oil Low Pressure Indicator
20. Preheat Indicator
21. Air Filter Restriction Indicator
22. Clearance Light Indicator

Monitor Display

1. Monitor Display
2. Monitor Display Mode Selector
3. Monitor Display Selector (Up)
4. Monitor Display Selector (Down)
5. Speedometer
6. Information Display
7. Traction Control Indicator
8. Forward/Reverse and Shift Position Indicator
9. Ride Control Indicator (Option)
10. ECO Indicator

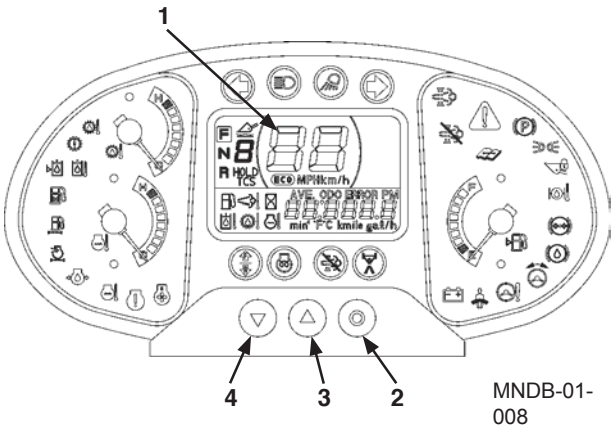

MNDB-01-008

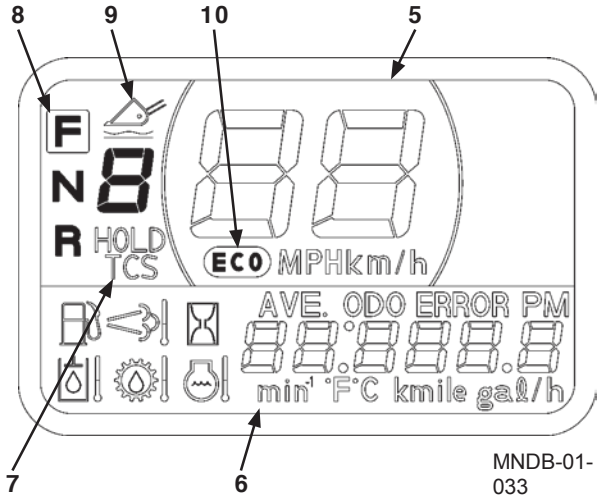

MNDB-01-033

Monitor Display

1. Monitor Display
2. Monitor Display Mode Selector
3. Monitor Display Selector (Up)
4. Monitor Display Selector (Down)
5. Speedometer
6. Information Display
7. Hold Indicator
8. Forward/Reverse and Shift Position Indicator
9. Ride Control Indicator
10. ECO Indicator

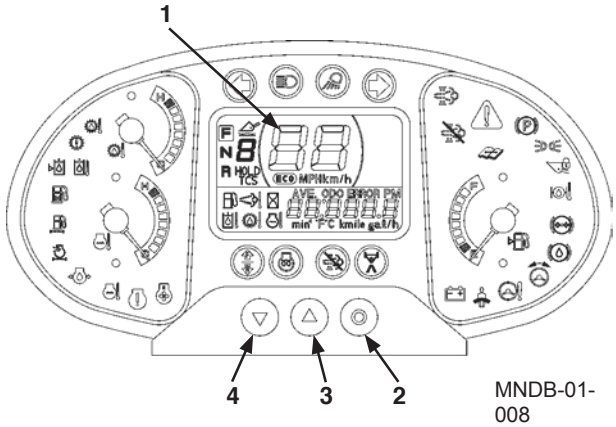

MNDB-01-008

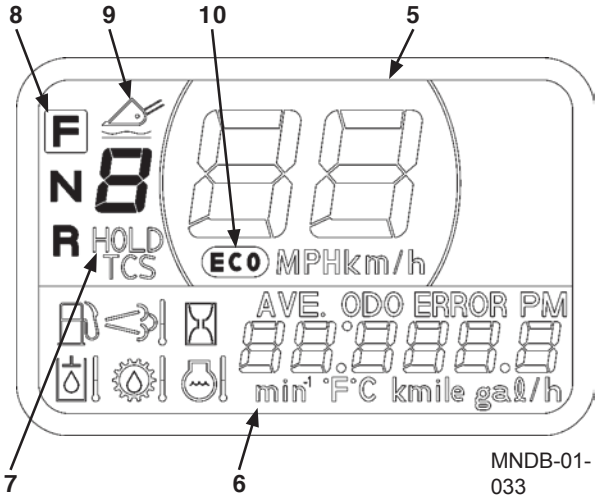

MNDB-01-033

70Z7 Dash Video

Basic Screen

1. Engine Tachometer
2. Economy (ECO) Indicator
3. Speedometer
4. Transmission Oil Temperature Gauge
5. Brake Oil Pressure Gauge
6. Air Conditioner Display
7. Ride Control Indicator (Optional)
8. Seat Belt Indicator
9. Forward/Reverse Selector Switch Indicator
10. Declutch Indicator
11. Exhaust Filter Indicator
12. Power Mode Indicator
13. Auto Idling Stop Indicator (Optional)
14. Dual Lift Arm Auto Leveler Indicator
15. Clock, Hour Meter, Odometer
16. Fan Reverse Rotation Indicator
17. Shift HOLD Display
18. Transmission Auto-shifting Indicator
19. F-N-R/Shift Position Indicator

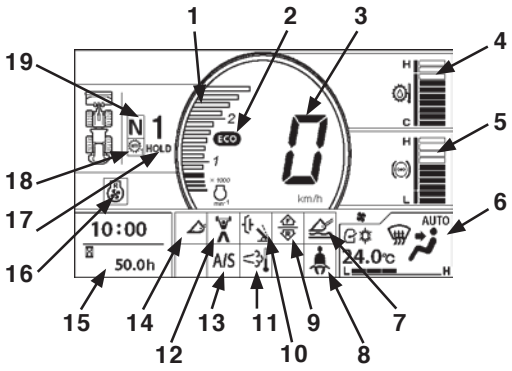

MNEC-01-100EN-KC

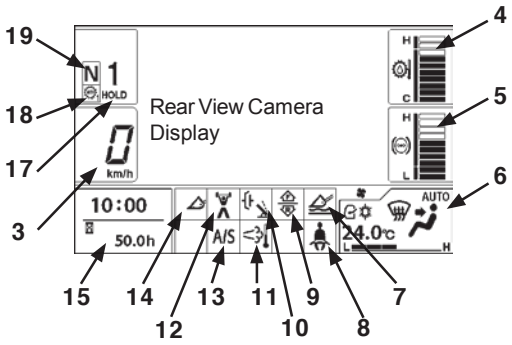

When Rear View Monitor is Operative

MNEC-01-101EN-KC

Basic Screen

1. Engine Tachometer
2. Economy (ECO) Indicator
3. Speedometer
4. Transmission Oil Temperature Gauge
5. DEF/AdBlue® Level Gauge
6. Air Conditioner Display
7. Ride Control Indicator (Option)
8. Seat Belt Indicator
9. Forward/Reverse Selector Switch Indicator
10. Declutch Indicator
11. After treatment Device Indicator
12. Power Mode Indicator
13. Auto Idling Stop Indicator
14. Dual Lift Arm Auto Leveler Indicator
15. Clock, Hour Meter, Odometer
16. Fan Reverse Rotation Indicator
17. Shift HOLD Display
18. Transmission Auto-shifting Indicator
19. F-N-R/Shift Position Indicator
20. Joystick Steering Indicator (Option)*

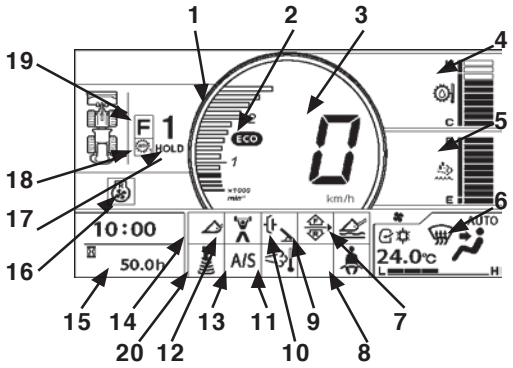

MNEK-01-100EN

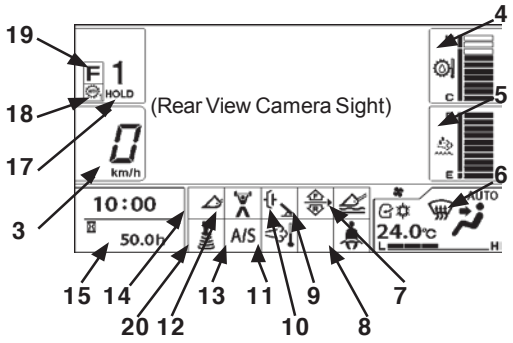

When Rear View Monitor is Operative

MNEK-01-101EN

*Joystick Steering Option not available on ZW180-6

Basic Screen

1. Engine Tachometer
2. Economy (ECO) Indicator
3. Speedometer
4. Transmission Oil Temperature Gauge
5. DEF/AdBlue® Level Gauge
6. Air Conditioner Display
7. Ride Control Indicator (Option)
8. Seat Belt Indicator
9. Forward/Reverse Selector Switch Indicator
10. Declutch Indicator
11. After treatment Device Indicator
12. Power Mode Indicator
13. Auto Idling Stop Indicator
14. Dual Lift Arm Auto Leveler Indicator
15. Clock, Hour Meter, Odometer
16. Fan Reverse Rotation Indicator
17. Shift HOLD Display
18. Transmission Auto-shifting Indicator
19. F-N-R/Shift Position Indicator
20. Torque Converter Lock-Up Indicator

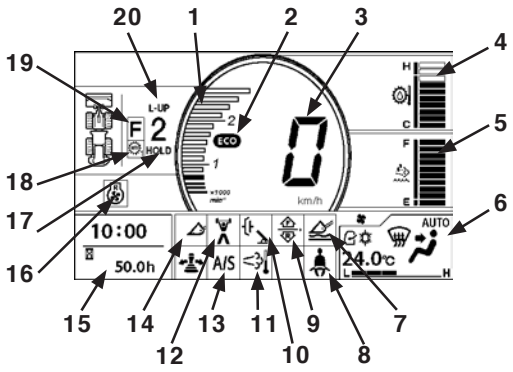

MNEC-01-100EN-7B

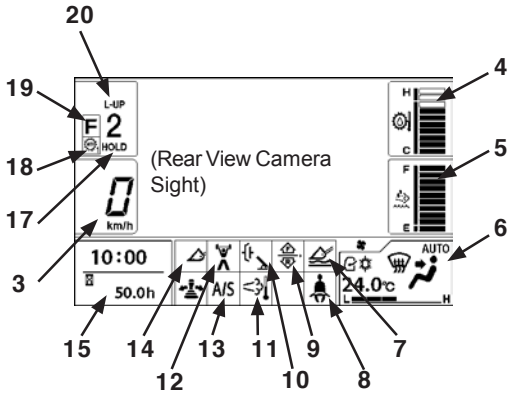

When Rear View Monitor is Operative

MNEC-01-101EN-7B

INDICATORS

Display	Contents of Alarms	Remedy
	Hydraulic Oil Overheat Alarm	Hydraulic oil temperature is above normal. Stop operation. Run the engine at slow idle speed to lower the oil temperature.
	Axle Oil Temperature Alarm	Axle oil temperature is above normal. Check if the service brake drags.
	Transmission Oil Temperature Alarm	Transmission oil temperature is above normal. Stop operation. Run the engine at slow idle speed to lower the oil temperature. Use correct range for machine operation, and do not stall torque converter.
	Engine Trouble Alarm	Engine or engine related parts are abnormal. Immediately set the machine in the park position, apply parking brake, stop the engine and contact your authorized dealer.
	Transmission Alarm	Transmission or transmission related parts are abnormal. Immediately set the machine in the park position, apply parking brake, stop the engine and contact your authorized dealer.
	Engine Oil Pressure Alarm	Engine oil pressure has decreased. Immediately stop the engine, and apply parking brake. Check the engine oil system and oil level.
	Transmission Oil Pressure Alarm	Transmission oil pressure has decreased. Stop machine operation, and apply parking brake. Check transmission oil level and any oil leaks from piping.
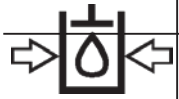 BOOST	Main Pump Oil Pressure Alarm	Main pump oil pressure has decreased. Stop machine operation, and apply parking brake. Check the piping of front attachment for oil leaks.
	Boost Temperature Increasing Alarm	Intake air temperature is abnormally high. Stop operation. Check intercooler for clogging and intake air piping connections.

Display	Contents of Alarms	Remedy
	Exhaust Gas Temperature Alarm	Exhaust temperature is abnormally high. Stop machine operation, apply parking brake, and check the exhaust lines.
	Intake Air Boost Temperature Difference Alarm	Intercooler cooling performance is low. Stop machine operation and apply parking brake. Check for clogged intercooler and/or disconnected intake air piping.
	Intake Air Temperature Rise Alarm	Intake air temperature is abnormally high. Stop machine operation and apply parking brake. Check for any abnormality such as disconnected intake air piping.
	Exhaust Filter Alarm	Exhaust filter is abnormal. Consult your nearest authorized dealer.
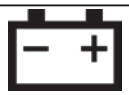	Battery Charge Alarm	Electrical system charge is abnormal. Inspect the alternator and the battery system.
	Fuel Temperature Alarm	Fuel temperature is abnormally high. Stop machine operation and apply parking brake. Run the engine at slow idle speed to lower the fuel temperature.
	Air Cleaner Clogging	Air filter elements are clogged. Clean or replace air cleaner element.
	Fuel Filter Restriction Alarm	Fuel filter is clogged. Replace fuel filter element.
	EGR Gas Temperature Alarm	EGR gas temperature is abnormally high. Stop operation, apply parking brake, and check EGR cooler, EGR cooler coolant circulation circuit, coolant level and intake air and exhaust piping for any abnormality.
	Water Separator Alarm	Water separator is full. Drain water.

Multi Function Monitor

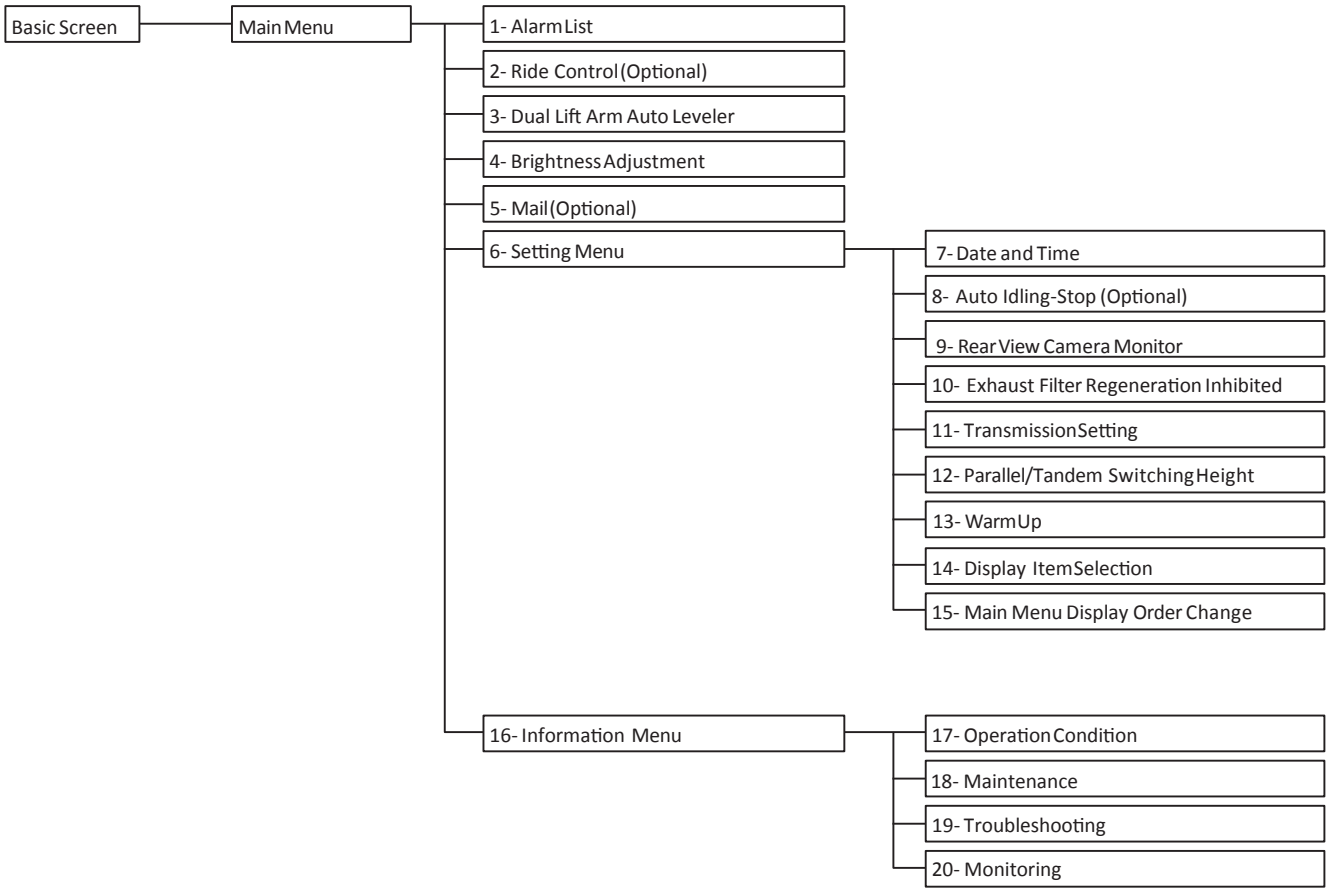

Watch the instructional videos:

#2
Ride Control

#3
Dual Lift Arm Auto Leveler

#8
Auto Idling-Stop

#10
Exhaust Filter Regeneration Inhibited

#12
Parallel/Tandem Switching Height

#13
Warm Up

#18, 20
Maintenance & Monitoring

Exhaust Filter Regeneration

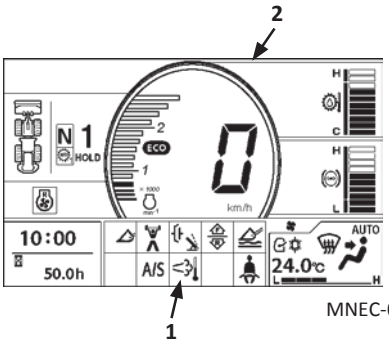

The machine is equipped with an exhaust filter (this is also referred to as a diesel particulate ter or "DPF"), in order to meet governmental emissions regulations.

The exhaust filter captures soot from the exhaust system.
To keep the system working correctly, periodically, the collected soot is turned to ash by burning it at a high temperature. This process is known as "regeneration".
DPF regeneration is done in three ways; automatic regeneration (abbreviated as auto-regeneration), manual regeneration, and service regeneration.

Exhaust Filter Status Display

Exhaust Filter Display (1) displays the regeneration level of the exhaust filter.

This symbol indicates that the exhaust temperature is higher than normal during the exhaust filter regeneration. It lights while auto-regeneration or manual regeneration is in process.)

Watch the instructional video:

Automatic Regeneration

Automatic regeneration (Auto-regeneration)

When the accumulated soot (PM) reaches to the specified quantity, the machine automatically increases the exhaust temperature during normal operation to convert soot to ash.

⚠

NOTE: The PM accumulation condition is viewed using the Monitoring menu. Refer to page 1-76 of the OMM.

There are no actions on the part of the operator when auto- regeneration is performed.

- *There is no set hourly interval or time for auto-regeneration to occur.*
- *Auto-regeneration may start while operating the machine, and there is no need to stop the machine. when this happens.*
- *Engine speed may change and white smoke may occur. This is not abnormal.*
- *Auto-regeneration is a normal maintenance process, and is not a malfunction.*

  Do not stop the engine or regeneration once auto-regeneration has started, unless it is absolutely necessary.

Manual Regeneration

When the soot level increases to a level that is more than an exhaust filter auto-regeneration can remove, a manual regeneration is required.
The yellow regeneration symbol (shown below)(1) and service indicator (2) are provided to make the operator aware that this is required.

(Lighting, Yellow)

This symbol indicates that the exhaust filter manual regeneration is required. Perform manual regeneration (Refer to page 5-11 of the OMM for the procedure.)

(Blinking, Yellow)

This symbol indicates that immediate exhaust filter manual regeneration is required. Perform manual regeneration (Refer to page 5-11 of the OMM for the procedure.)

The manual regeneration must be performed as soon as possible, and it will take the loader out of service for about 10~20 miniutes.
Refer to page 5-11 of the OMM for the manual regeneration procedure.

⚠ *NOTE: When the manual regeneration is attempted but not needed, the message "Minimal Exhaust Restriction, Exhaust Filter Cleaning Not Available" is displayed on the monitor panel.*

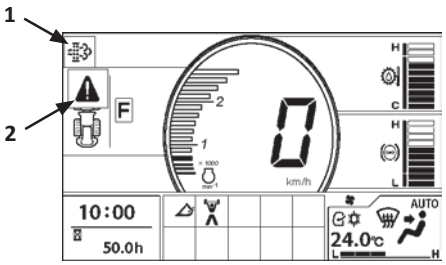

Basic Screen MNEC-01-280EN-KC

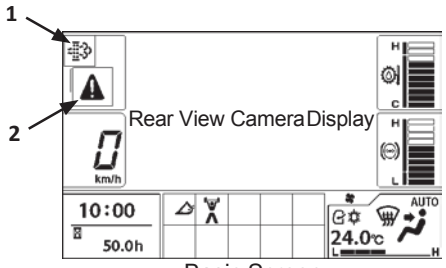

Basic Screen (Operating Rear View Monitor) MNEC-01-281EN-KC

Watch the instructional videos:

Manual Regeneration

Service Regeneration

Service Regeneration

When the soot level increases to a level that is more than an exhaust filter manual regeneration can remove, a service regeneration is required. This must be performed by an authorized service dealer.
The red regeneration symbol (shown below) is provided to make the operator aware that this is required.
It may be necessary to remove the exhaust filter and clean or replace it, depending on its condition. Contact your local authorized dealer.

(Blinking, Red)

This symbol indicates that the exhaust filter service regeneration is required. Immediately stop operation, park the machine in a safe location. Then, contact your nearest authorized dealer

(Lighting, Yellow)

This symbol indicates that the exhaust filter regeneration is inhibited. It is displayed when the manual regeneration is requested while
filter regeneration "inhibited" feature has been applied. Move the machine to a safe place. Perform manual regeneration following the below procedure. Refer to page 1-55 for more information.

DEF/SCR System Alarm

When the DEF/AdBlue® level becomes low and/or the Urea SCR system malfunctions, the engine performance is controlled depending on the status.
The operator is alerted with alarm indicators.
Move and park the machine in a safe place and follow the displayed message, or troubleshooting guide for the accompanied alarms.

Watch the instructional videos:

Diesel Exhaust Fluid (DEF) Introduction to T4 Final ZW Models

Selective Catalytic Reduction (SCR) Inducement Process

DEF/AdBlue® Level Alarm

Display of the DEF/AdBlue gauge changes depending on the DEF/AdBlue level.
The engine speed and output level control is as follows.

NOTE: Set the FNR controller to neutral or apply the parking brake to show the alarm message on the monitor.

Level Gauge	Alarm Indicator		Status/Inducement
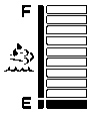 (Yellow)	(Red, light)		DEF/AdBlue® level is low. Refill DEF/AdBlue®.
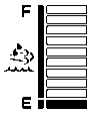 (Red)	(Red, slow blink)		DEF/AdBlue® is insufficient. Refill DEF/AdBlue®. Engine output is restricted.
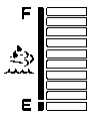 (Red)	(Red, slow blink)		DEF/AdBlue® tank is empty. Refill DEF/AdBlue®. Engine output and speed are restricted.
	(Red, fast blink)		
	(Red, fast blink)		

CAUTION: When /AdBlue tank becomes empty, the

engine runs but machine operation is disabled until DEF/AdBlue is supplied.

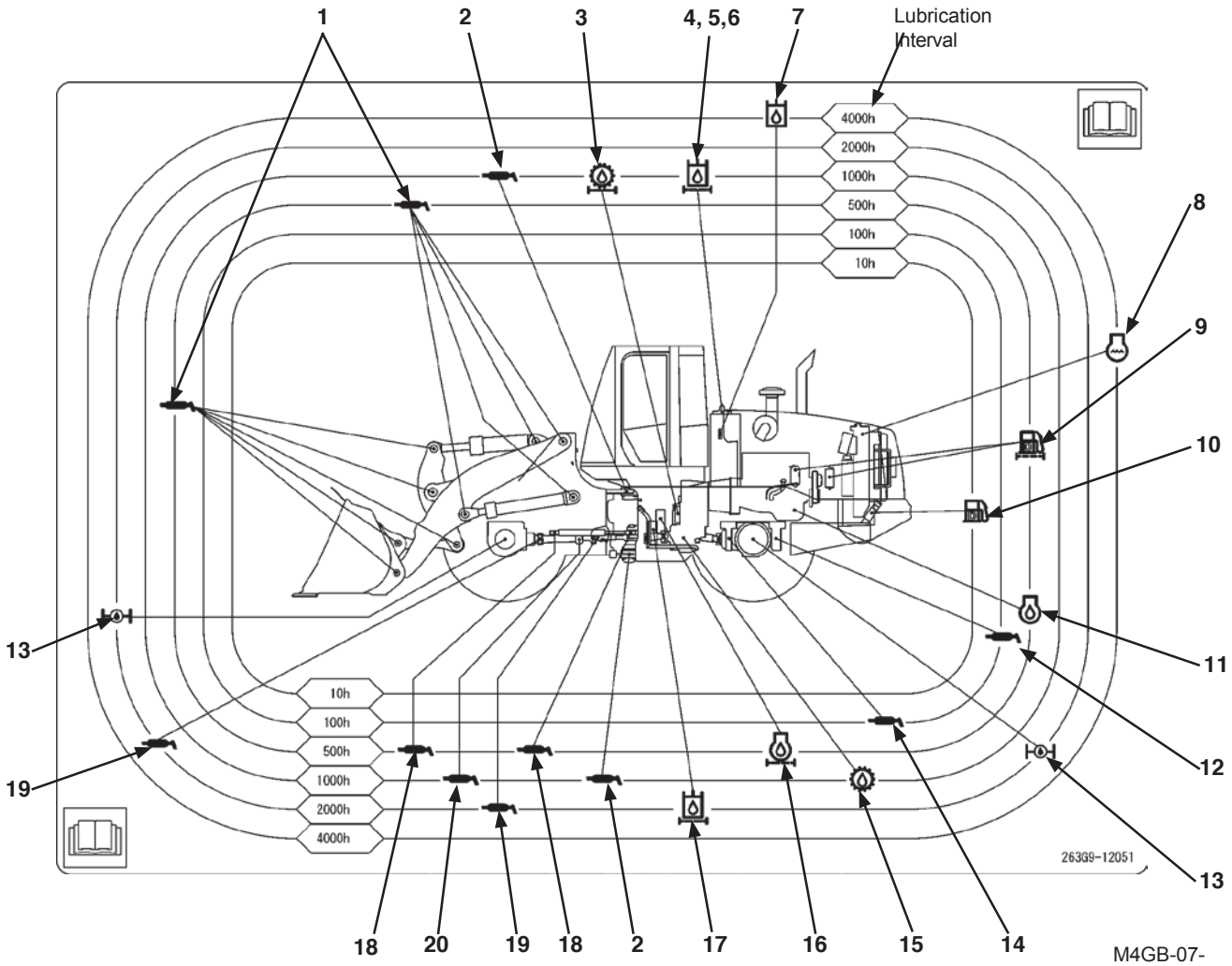

M4GB-07-001

	Item	Page		Item	Page
1	Grease (Front Joint Pin)	7-22	11	Engine Oil	7-27
2	Grease (Frame Hinge Pin)	7-24	12	Grease (Rear Axle Support Pin)	7-25
3	Transmission Oil Filter	7-32	13	Axle Gear Oil (Final drive, Differential gear)	7-35
4	Hydraulic Oil Filter (Suction)	7-43	14	Grease (Front Axle Support pin)	7-25
5	Hydraulic Oil Filter (Main)	7-46	15	Transmission Oil	7-32
6	Air Breather Element	7-48	16	Engine Oil Filter	7-30
7	Hydraulic Oil	7-41	17	Hydraulic Oil Filter (Pilot)	7-44
8	Coolant (Long-Life Coolant)	7-73	18	Grease (Steering Cylinder Pin)	7-23
9	Fuel Filter, Fuel Pre-Filter	7-63 to 64	19	Grease (Propeller Shaft)	7-26
10	Fuel Oil (Diesel Fuel)	7-56	20	Grease (Propeller Shaft Center Support)	7-26

FLUID SPECIFICATIONS

GREASE

Application	Chassis Lubrication
Grease Specifications	-20˚C to 45˚C (-4˚F to 113˚F)*
Manufacturer	**Recommended Grease**
Chevron	Delo Heavy Duty EP 3% or 5% Moly
ExxonMobil	Mobilgrease XHP 322
Shell	Gadus S3 V460D
ConocoPhillips	Megaplex XD3 or XD5
Valvoline	Palladium

Preferred Grease Characteristics: Lithium Complex, EP, 3%–5% Moly

* NLGI No. 2 grease is suitable for most temperatures. Use NLGI No. 1 or No. 0 for extreme low temperatures and some auto lube systems. Contact your lubrications supplier for additional information

ENGINE OIL

Application	Crankcase	
Change Interval	500 Hours	
Temperature Range	-20˚C to 30˚C (-4˚F to 86˚F)**	-15˚C to 40˚C (5˚F to 104˚F)**
Manufacturer	**Recommended Engine Oil**	**Recommended Engine Oil**
Chevron	Delo 400 LE 10W-30	Delo 400 LE 15W-40
ExxonMobil	Delvac 1300 Super 10W-30	Delvac 1300 Super 15W-40
Shell	Rotella T Triple Protection 10W-30	Rotella T Triple Protection 15W-30
ConocoPhillips	Guardol ECT 10W-30	Guardol ECT 15W-30
Valvoline	All Fleet Plus 10W-30	Premium Blue 15W-30

EPA Tier 4 Interim engines require an API CJ-4 engine oil specification or serious damage to the DPF can occur. Use of non CJ-4 engine oil will void the emission control warranties.

RECOMMENDED HYDRAULIC OIL[1]

Application	Hydraulic Tank	
Change Interval	4,000 Hours	2,000 Hours
Temperature Range	-20˚C to 30˚C (-4˚F to 86˚F)**	
Manufacturer	**Zinc-Free Products**	**Zinc Content Products**
Hitachi	Super EX 46HN (IDE VG 46)	N/A
Chevron	Clarity Hydraulic Oil AW46***	Ursa Hydraulic Oil 10W
ExxonMobil	DTE 10 Excel 46***	Hydraulic 10W
Shell	Tellus S3 V46***	Spirax S4 CX 10W
ConocoPhillips	Ecoterra HVI-E 46***	T5X 10W
Valvoline	N/A	AW HVI Hydraulic Fluid 46

Warning: If hydraulic oils containing zinc and zinc-free oils are mixed, the oil must be changed at 2,000 hours.

[1] Hitachi loaders with hydrostatic transmissions (HST) have change intervals of 2,000 hours with zinc-free oil and 1,500 hours with zinc oils.

TRANSMISSION OIL

Application	Transmission & Torque Converter
Initial Change Interval	ZW120-6 - ZW150-6: 500 hours 60Z7 – 67Z7 T4F: 500 hours
	ZW180-6 - ZW250-6: 100 hours 70Z7 – 85Z7 T4F: 100 hours
	ZW310-6 - ZW550-6: 250 hours 90Z7 – 115Z7 T4F: 250 hours
Normal Change Interval	1,000 hours
Temperature Range	-20˚C to 45˚C (-4˚F to 113˚F)**
Manufacturer	**Recommended Transmission Oil**
Chevron	Drive Train Fluid HD 10W
ExxonMobil	Mobil trans HD 10W
Shell	Spirax S4 CX 10W
ConocoPhillips	PowerDrive Fluid 10W
Valvoline	Drive Train Transmission Oil 10W

AXLE OIL

Application	Axle and Wet Disc Brake (ZW310-6–ZW550-6)(90Z7 T4F - 115Z7 T4F)
Change Interval	2,000 hours
Temperature Range	-20˚C to 45˚C (-4˚F to 113˚F)**
Manufacturer	**Recommended Axle Oil**
Chevron	Drive Train Fluid HD 50W
ExxonMobil	Mobil trans HD 50W
Shell	Spirax S4 CX 50W
ConocoPhillips	PowerDrive Fluid 50W
Valvoline	Drive Train Transmission Oil 50W

Axle Oil	Models: ZW50 – ZW250-6 (Only) 42ZV-2 – 85Z7T4F (Only)
ExxonMobil	Mobilube HD 80W-90

Note: Top treatment with and Anti-Chatter additive may be necessary top prevent or eliminate service brake application noise. Please refer to Hitachi Loaders Service News Bulletin 2014-001B

** Consult your lubrications supplier for actual working temperature ranges of their products. For extreme low ambient temperatures, lower viscosity or synthetic oils will be required.

*** Oil manufacturer claims of extended oil change intervals are the responsibility of said manufacturer. Hitachi Loaders has not independently verified these extended oil change interval claims and recommends routine oil sampling analysis to determine hydraulic oil condition and change interval in excess of 2,000 hours.

© 2018 Hitachi Construction Machinery Loaders America Inc. All rights reserved.

HITACHI

Wheel Loader

Start up and shut down procedure

Reliable solutions

Operator/Inspector_____**Date**_____

Time_____ **Site** _____

Do a walk-around inspection outside of machine prior to start up (refer to OMM)		Comments
Always read & understand Operation & Maintenance Manual (OMM) before operating		
STARTING THE MACHINE		
Turn the battery disconnect switch to ON (if equipped)		
Engage the parking brake		
Adjust seat, adjust mirrors, fasten seat belt		
Be sure that shift lever or direction control lever is in neutral		
Ensure all implements are completely lowered		
Be sure that attachment control levers are in the "HOLD" position		
Ensure all personnel are clear of machine		
Sound horn		
Use ether start aid switch if necessary or if so equipped (refer to OMM)		
Turn-key start switch to the "ON" position		
Perform startup test or observe monitoring system self-test (if applicable)		
Turn-key start switch to START and turn engine		
MACHINE WARM UP **NOTE: Be sure bystanders are away from machine!**		
First run the engine at low idle to allow machine to warm up (refer to OMM)		
Engage and disengage attachment controls slowly to help speed warm-up of hydraulic components (hydraulic lever lock must be released)		
Cycle all controls to allow warm oil to circulate through all hydraulic cylinders and lines		
Perform steering, service brake, and parking brake operation checks (refer to OMM by machine model as steering controls vary by model and options)		
Check secondary steering operation (if equipped)		
Check gauges and indicator lamps frequently		
MOVING THE MACHINE **NOTE: Be sure bystanders are away from machine!**		
Ensure area is clear		
Raise all lowered implements		
Depress service brake pedal		
Release the parking brake		
Move transmission control lever to desired direction		
Release service brake pedal and depress accelerator pedal		
MACHINE SHUT DOWN		
Park the machine on a safe, smooth level area		
Set parking brake		
Lower all hydraulic implements		
Run engine at low idle for several minutes to allow engine & Turbo to cool (abide by local regulations)		
Turn-key start switch to the "OFF" position and remove key		
Carefully dismount machine, and use 3-point contact at access / egress stairway		
Block wheels and turn off disconnect switch if parking for extended period (refer OMM)		
Do a walk around inspection to look for anything that may appear damaged or irregular		
Mount vandal protection if so equipped		

Additional comments or notes

© 2018 Hitachi Construction Machinery Loaders America Inc. All rights reserved.

Operator Training Checklist

Machine Model Number	Machine Serial Number	Operators Name (print)

	Inside Cab Checklist	Check
Operator Comfort & Safety	**Proper Entry/Exit Procedure**	
	Seat Adjustments	
	Right Arm Console Adjustments	
	Cold Storage Box Location	
	Telescoping Steering Wheel	
	24v vs 12v outlet locations	
	Location of OMM and Delivery Handbook	
	Mirror Positioning	
	FNR locations (Column and Console)	
	Parking Brake Location	
	Operating A/C and Stereo System	
	Fuse Box Location	
	Rearview Camera Location (ZW220-6 / 80Z7 and up)	
	Operating Lights and Windshield Wipers	
	Auto Idle Shutdown	
Controls and Switch Training	**Hydraulic Control Functions (Single Lever or Dual Levers)** *Circle option*	
	Right Hand Console Switches	
	Shift Hold Settings	
	Intellidig	
	Setting Declutch	
	Auto Reversing Fan	
	DPF Regeneration procedure (*if applicable***)**	
	Bucket Loading Method (*Material should be spilling over spill guard***)**	
	FNR settings "*Machine Won't Start what I do?*"	
	Power Mode vs Normal Mode (Quick Power mode)	
	Boom Kickout Settings	
	3rd Spool Operation (*if applicable***)**	
	Joystick Steering (*if applicable***)**	
	Coupler Connect/Disconnect Process (*if applicable***)**	
	Ride Control Settings (*if applicable***)**	
	Transmission Settings (ZW310-6 / *90Z7 and larger* **)**	

	Outside Machine List	Check
Safety and Maintenance	**Safety Labels**	
	Serial Number Plates (*Machine and Bucket***)**	
	HN Bushings	
	Daily Grease Zerk locations	
	Rear Trunnion Grease Zerk Location *Must be greased daily*	
	Grease Zerk Diagram Location	
	Fluid Fill/Check Locations	
	Hydraulic Fluid Site Gauge (*How to Read***)**	
	Transmission Fluid Site Gauge (*How to Read***)**	
	DEF Fill up (if applicable) Importance of clean DEF Fluids going into machine	
	Check for Any Fluid Leaks	
	Battery Disconnect Switch	
	Tool Box Location	
	Articulating Locking Bar	
	Cleanouts on Fuel and Hydraulic Tanks	
	Air Filter Locations (*Machine and Cab***)**	
	Changing Air Filters (*How and When***)**	
	Check Radiator Cooler Clogging (*Proper Cleaning Method when needed***)**	
	Confirm Lights Working	
	Confirm Horn Working	
	Tires Inflated & Free from Major Cuts	

Operator Signature

Dealer Signature

NOTES

HITACHI

Hitachi Construction Machinery Co., Ltd. (Hitachi Construction Machinery) was established in 1970, when Hitachi, Ltd. spun off its Construction Machinery Division. Currently, there are 84 companies that comprise the Hitachi Construction Machinery Group providing Reliable solutions for customers in the heavy construction equipment industry. Hitachi Construction Machinery continues to grow as a strong, global, competitive enterprise.

Reliable solutions

Fast forward to 2010. A joint venture with Hitachi Construction Machinery and Kawasaki Heavy Industries was entered into to further develop the global scope of the wheel loader product line. This relationship combined the huge technological and manufacturing resources of Kawasaki Heavy Industries and Hitachi Construction Machinery Group. This effort has resulted in a very productive, reliable, and cost-effective product.

In 2016 Hitachi Construction Machinery bought 100% of KCM Corporation's stock transitioning to KCMA Corporation. In 2018 Hitachi Construction Machinery took the reins transitioning KCMA Corporation to Hitachi Construction Machinery Loaders America Inc., furthering their commitment to the North American market by introducing the Hitachi brand wheel loader line, offering outstanding parts availability, an unmatched factory component exchange program, customer and dealer training programs, and a wide range of services and programs.

With manufacturing facilities in Banshu, Japan; Ryugasaki, Japan, and Newnan, Ga., Hitachi Construction Machinery Loaders America has the experience and technology to design, engineer, manufacture, and service your next wheel loader. The Hitachi Construction Machinery Loaders America Inc. team is focused on wheel loaders. As a subsidiary of one of the largest construction machinery companies in the world, Hitachi Construction Machinery Loaders America Inc. is securely poised as your go-to source in the North American wheel loader market.

A FULL LINE OF WHEEL LOADERS

- 13 Models
- 30 HP–531 HP

REPUTATIONS ARE BUILT ON IT

Prior to operating this machine, including satellite communication system, in a country other than a country of its intended use, it may be necessary to make modifications to it so that it complies with the local regulatory standards (including safety standards) and legal requirements of that particular country. Please do not export or operate this machine outside the country of its intended use until such compliance has been confirmed. Please contact your Hitachi dealer in case of questions about compliance.

These specifications are subject to change without notice.
Illustrations and photos show the standard models, and may or may not include optional equipment, accessories, and all standard equipment with some differences in color and features. Before use, read and understand the Operator's Manual for proper operation.

Hitachi Construction Machinery Loaders America Inc.
www.hitachicm.us

PART #DELIVERY HANDBOOK 07/2018
Printed in USA